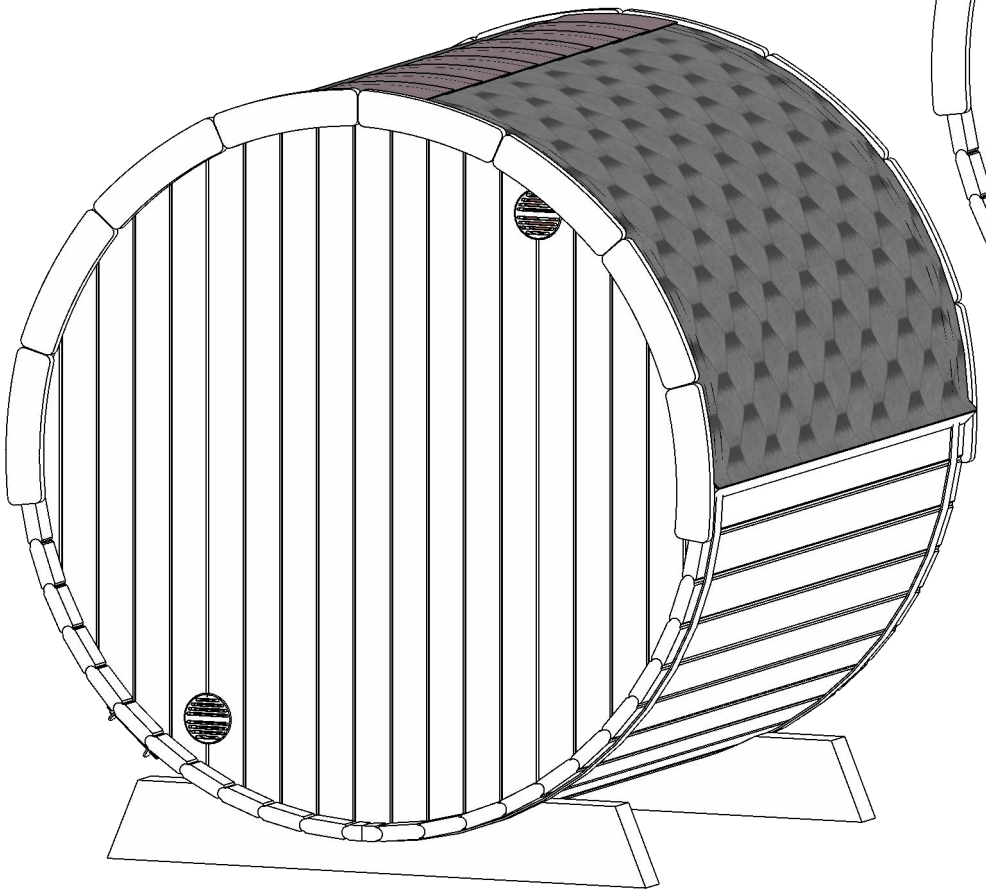

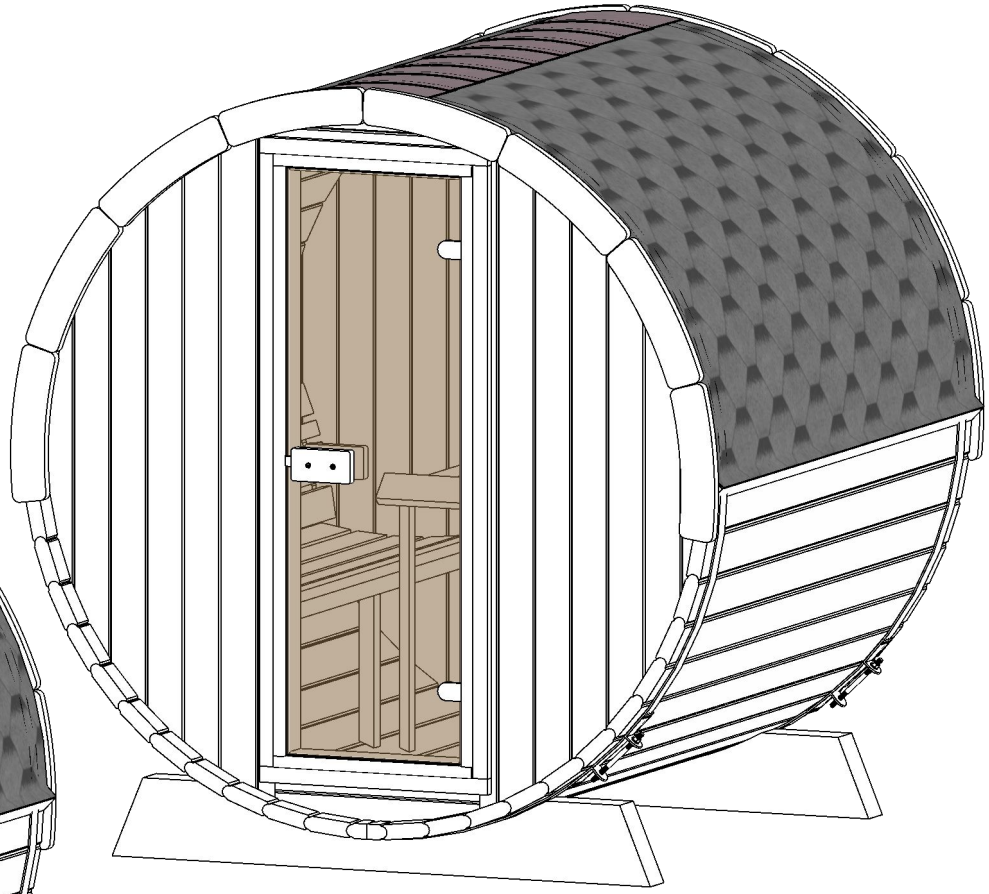

Note: Please read manual before construction

Tools needed

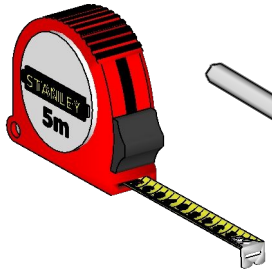

Measuring tape

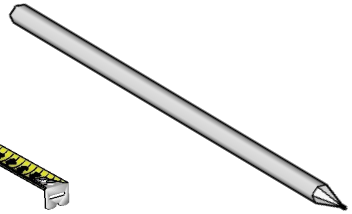

Marker pen

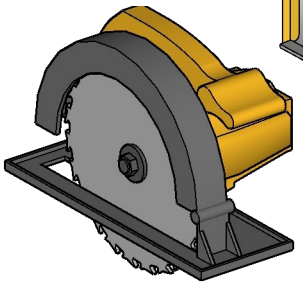

Circular saw

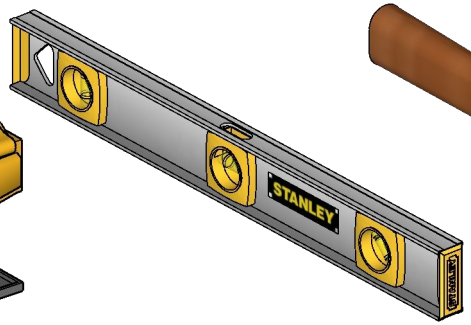

Water level

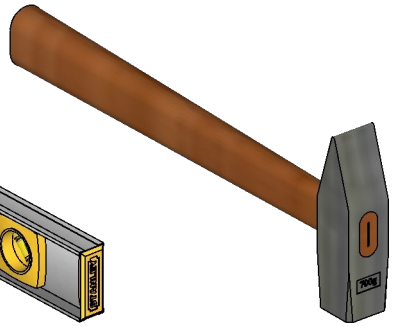

Hammer

Extra hands

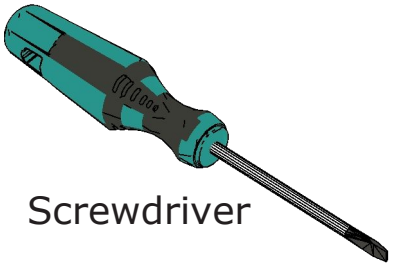

Screwdriver

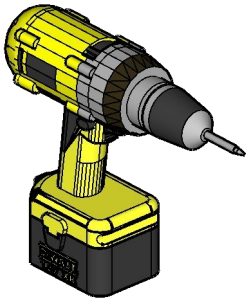

Drill

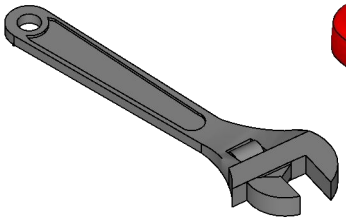

Cresent wrench

Utility knife

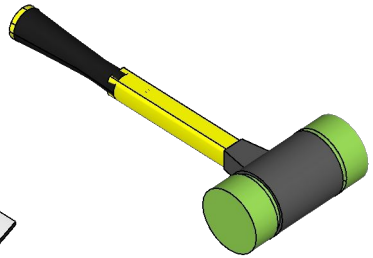

Rubber mallet

Ratchet strap

Details list 1/3

DET 1 ***Article.*** *K-PT-JAL-200D*	**x2**	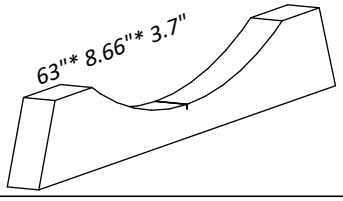	
DET A ***Article.*** *K-STL117/1600*	**x2**	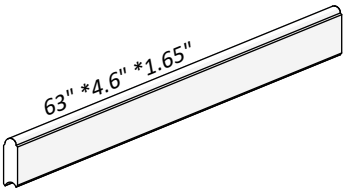	
DET 2 ***Article.*** *T-STL117/1800XLM01*	**x1**	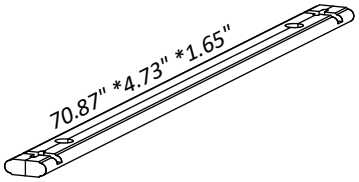	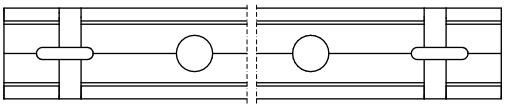
DET 3 ***Article.*** *T-STL117/1800-01*	**x59**	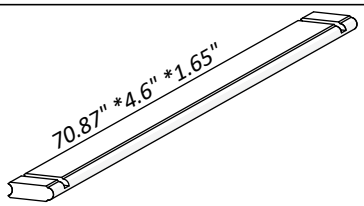	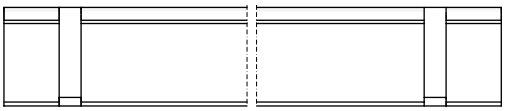
DET 6 *Det.2 jääk* ***Article.*** *T-STL117/1800XL-01*	**x2**	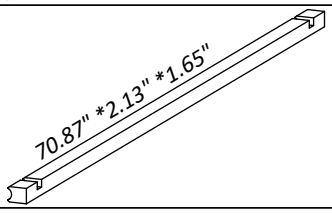	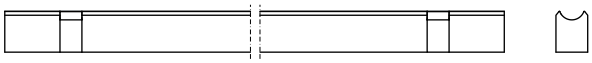
DET 6c/d/e/f *Lõika 1-st STL-st* ***Article.*** *T-STL117/1800KO-01*	**x1**	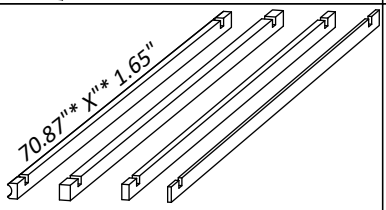	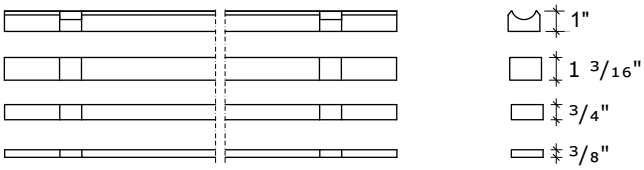
DET Y1 ***Article.*** *T-20-PTS/28-01V*	**x1**	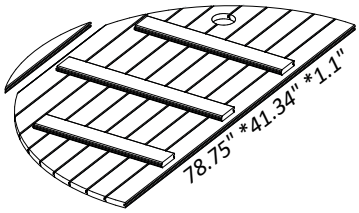	
DET Y2 ***Article.*** *T-20-PTS/28-01P*	**x1**	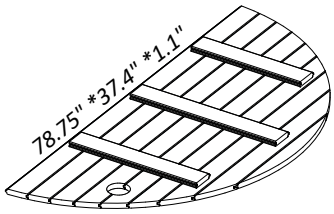	
DET T ***Article.*** *U-KL-6/17-KO*	**x1**	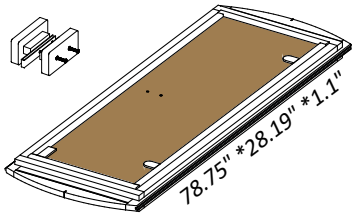	

Details list 2/3

DET Sa ***Article.*** *T-20-PES/28-01P*	**x1**	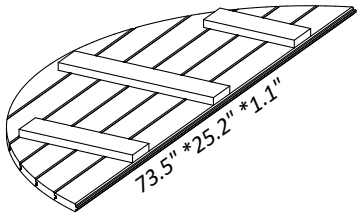	
DET Sb ***Article.*** *T-20-PES/28-01V*	**x1**	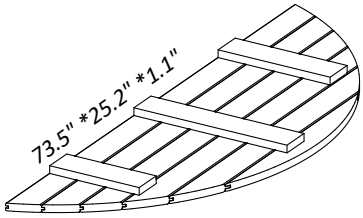	
DET U1 ***Article.*** *K-TL94/1900*	**x2**	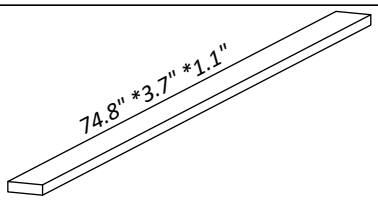	
DET 10 ***Article.*** *TL-LAMOD-1591-KA01*	**x2**	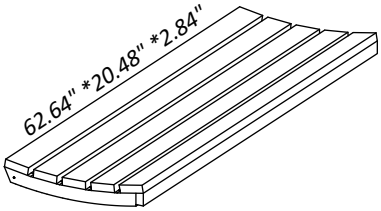	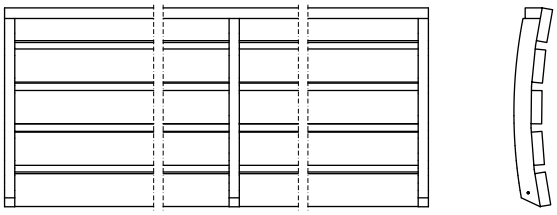
DET 14 ***Article.*** *TL-STMOD-1560-KA01*	**x2**	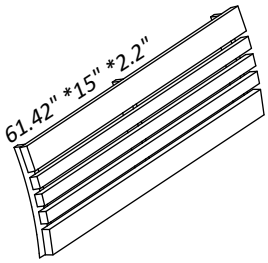	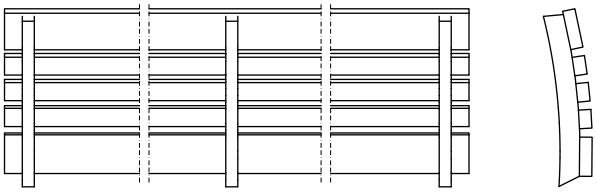
DET 10a ***Article.*** *K-HP44/470XP-XP*	**x2**	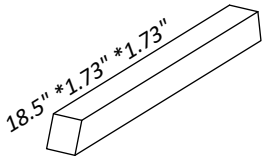	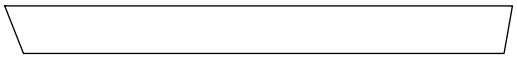
DET 10c ***Article.*** *K-HP44/170*	**x2**	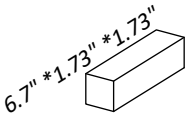	
DET 15a ***Article.*** *TL-LAV90/670XP*	**x2**	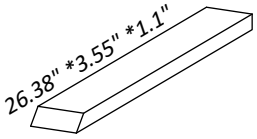	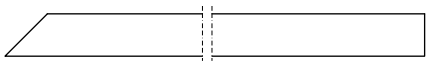
DET 15b ***Article.*** *TL-LAV42/90*	**x2**	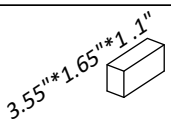	
DET 15c ***Article.*** *TL-LAV42/700XP*	**x2**	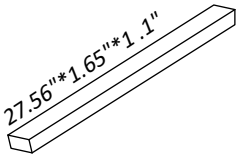	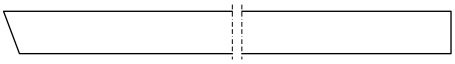

Details list 3/3

DET 15d ***Article.*** *TL-LAV90/800*	**x1**	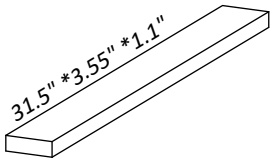	
DET 22 ***Article.*** *T-STL-1800-XX*	**x2**	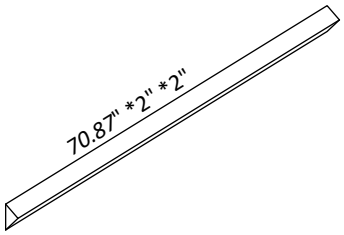	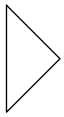
DET N ***Article.*** *KAT-HAR-MUST*	**x7**	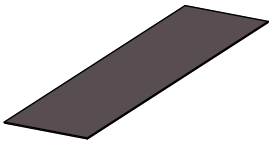	
DET O ***Article.*** *KAT-SIN-MUST*	**x51**	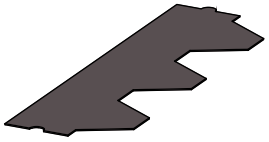	
DET 25 ***Article.*** *MU-OL-SAUN*	**x16**	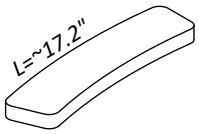	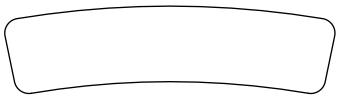
DET W ***Article.*** *MU-TRAPP*	**x2** kmpl	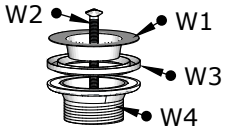	
DET B ***Article.*** *MU-VIT6220-KLZN*	**x2**	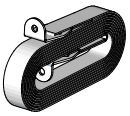	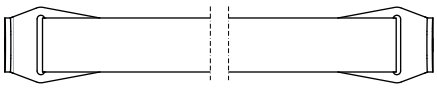
DET G ***Article.*** *MU-VENT-100-PU*	**x1**		
DET F ***Article.*** *MU-VENT-100-ZN*	**x3**		

Article.
KI-KERL-12-RV2

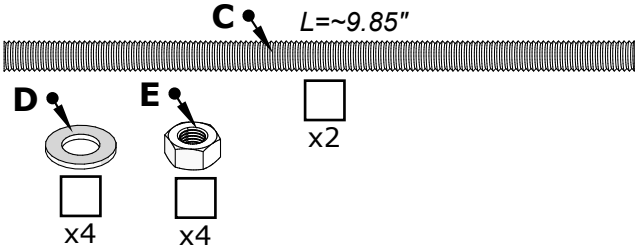

Article.
KI-USA-150-200

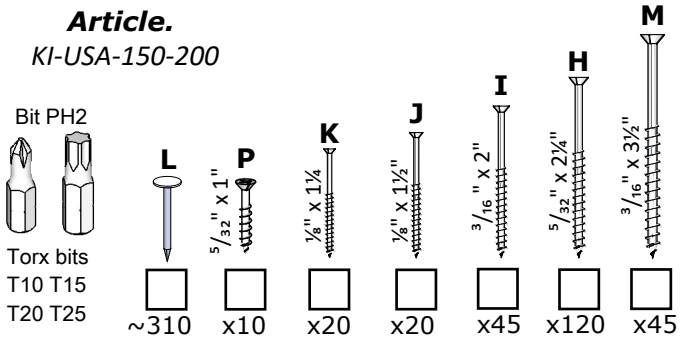

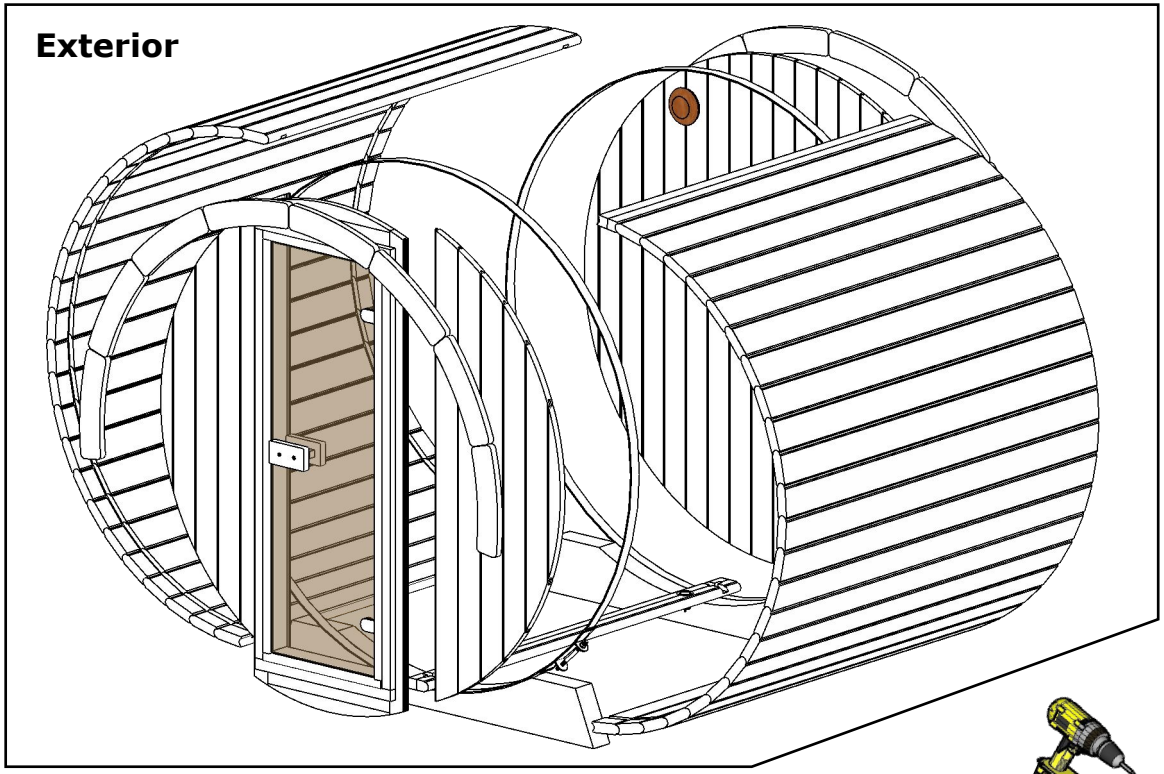
Exterior

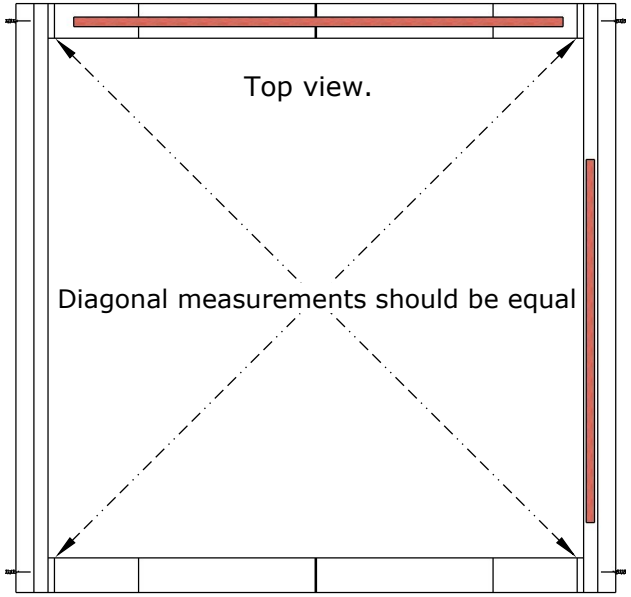
Top view.
Diagonal measurements should be equal

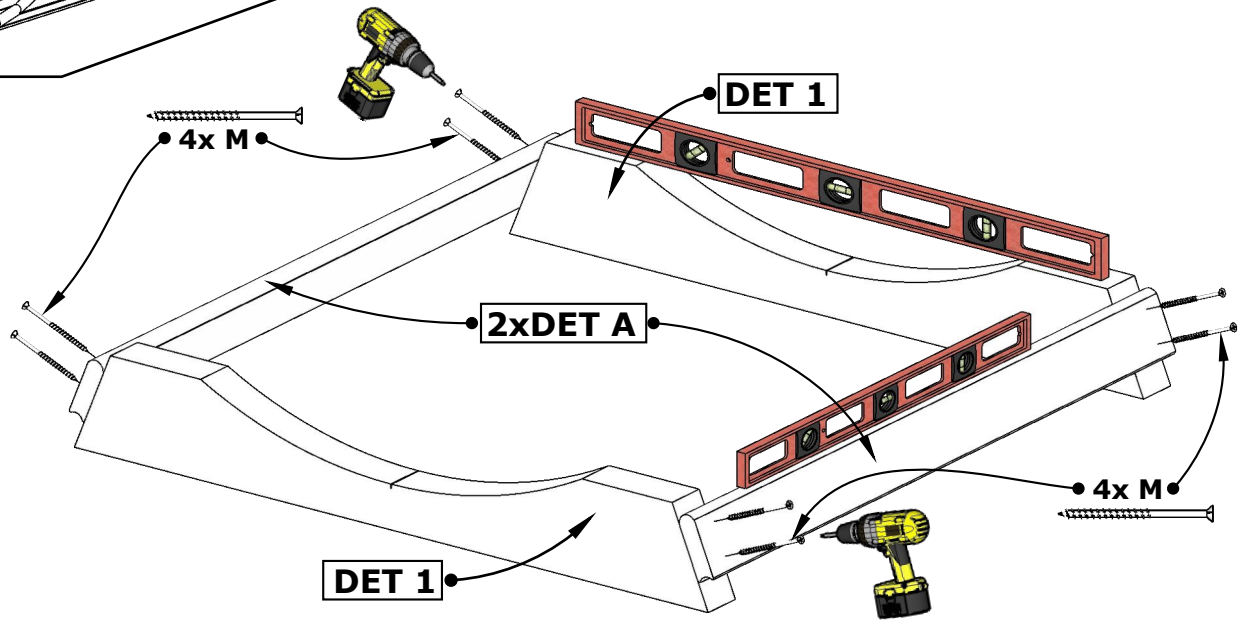
DET 1
4x M
2xDET A
4x M
DET 1

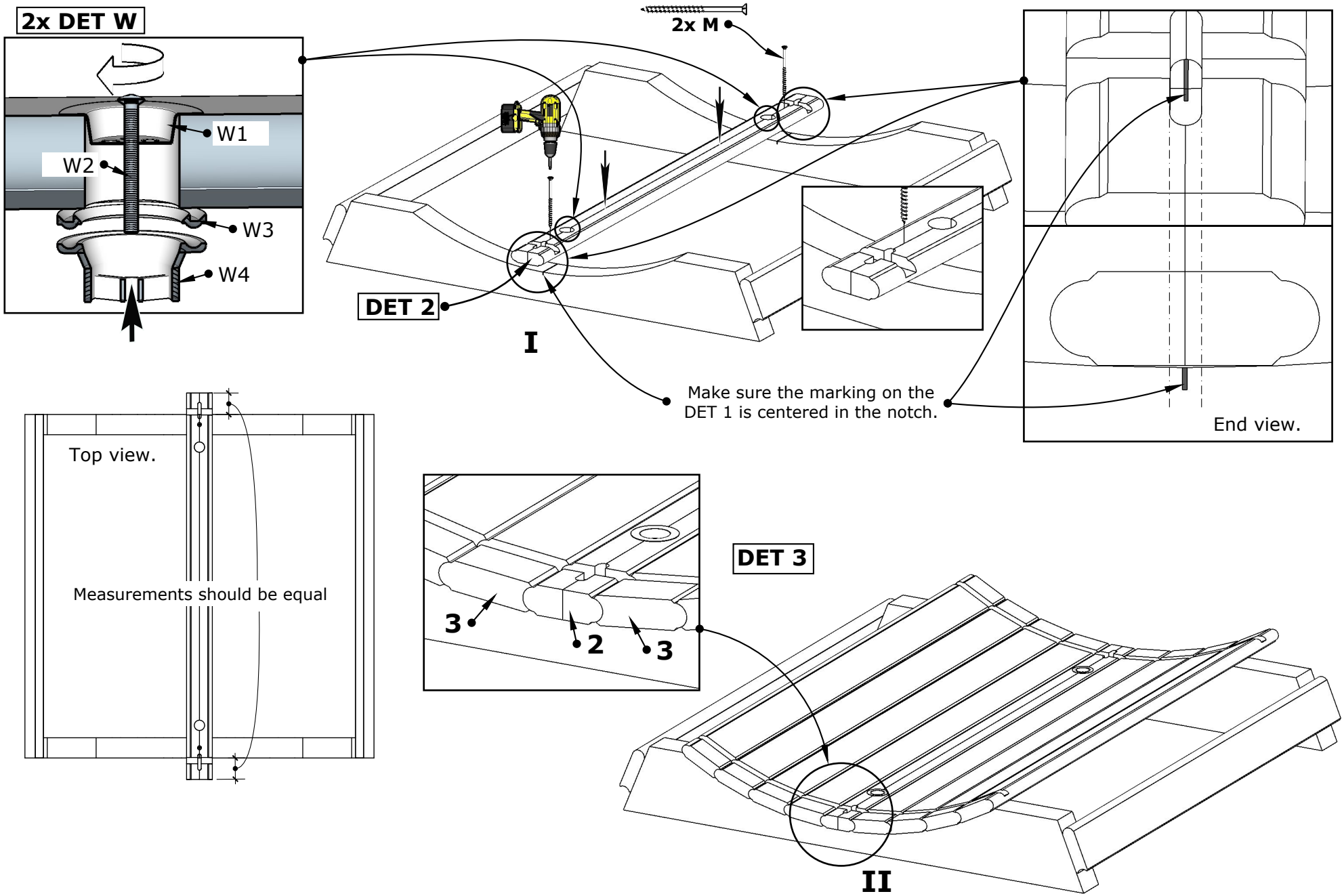
2x DET W
W1
W2
W3
W4
2x M
DET 2
I
Make sure the marking on the
DET 1 is centered in the notch.
End view.
Top view.
Measurements should be equal
DET 3
3
2
3
II

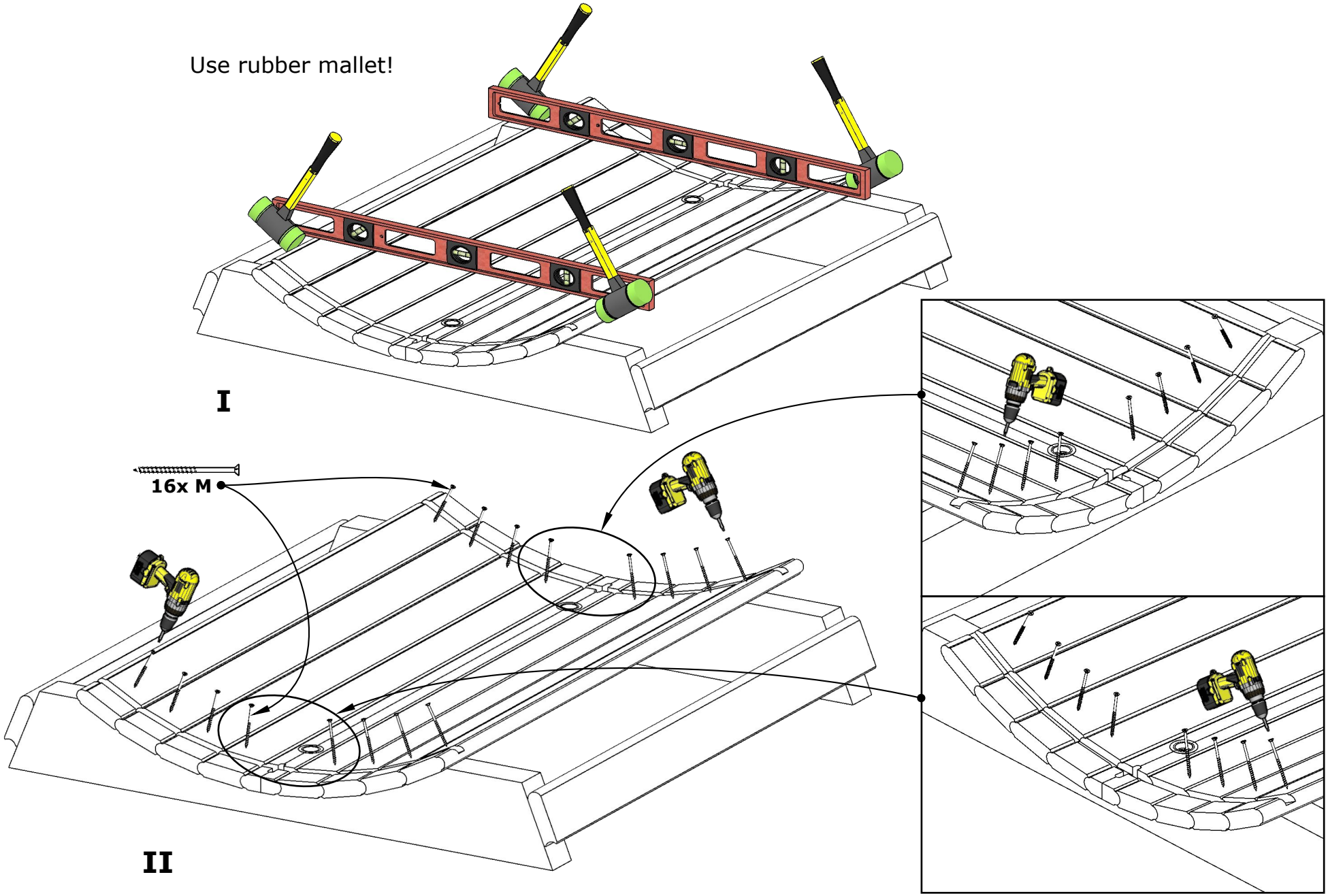
Use rubber mallet!
I
16x M
II

Wooden back wall assembly

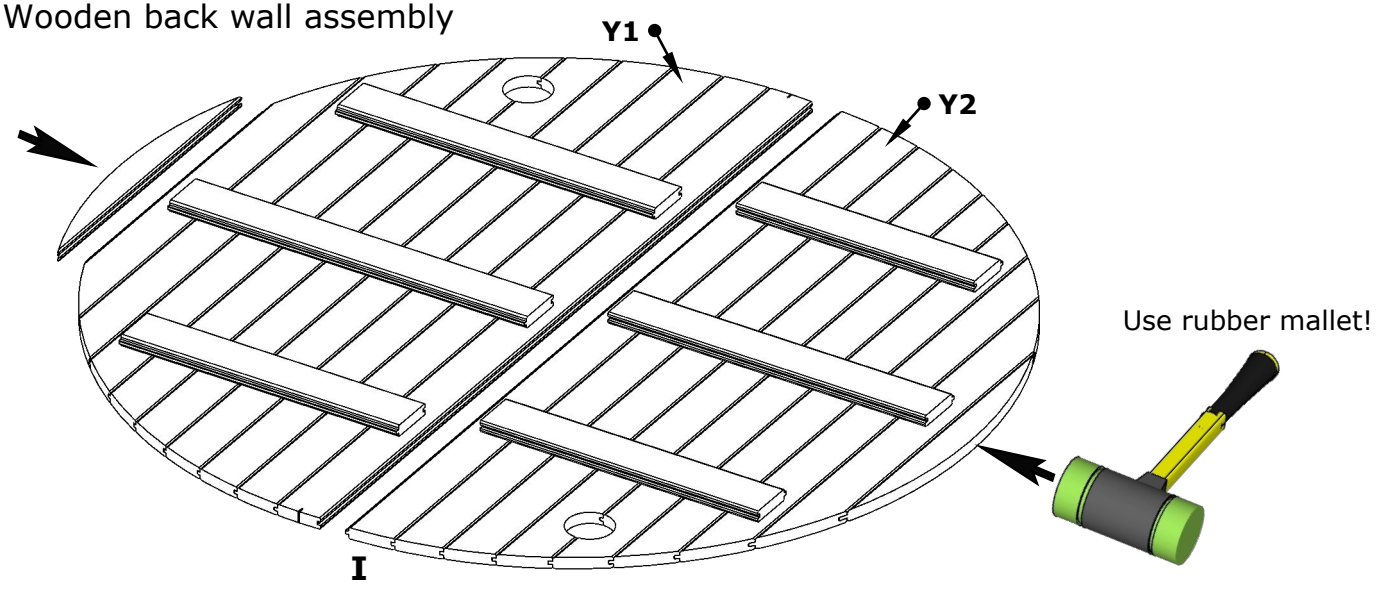

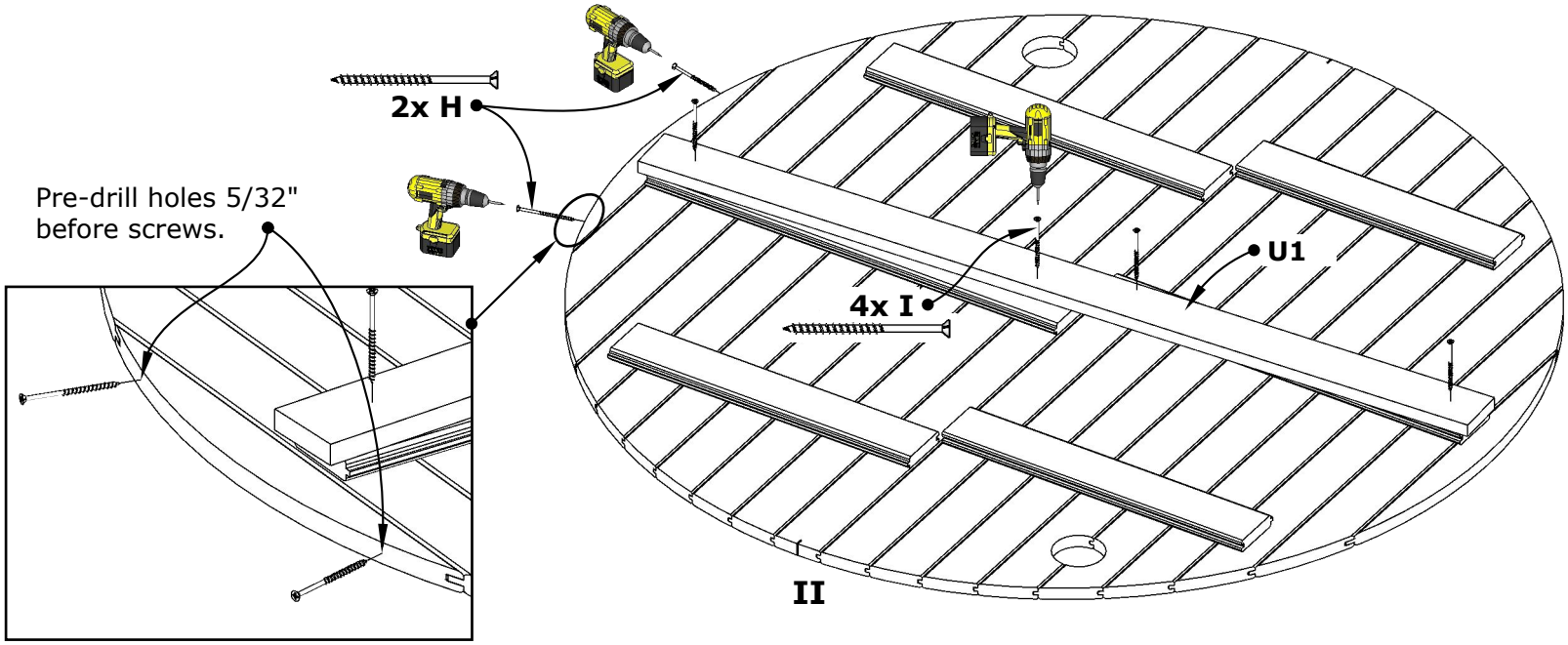

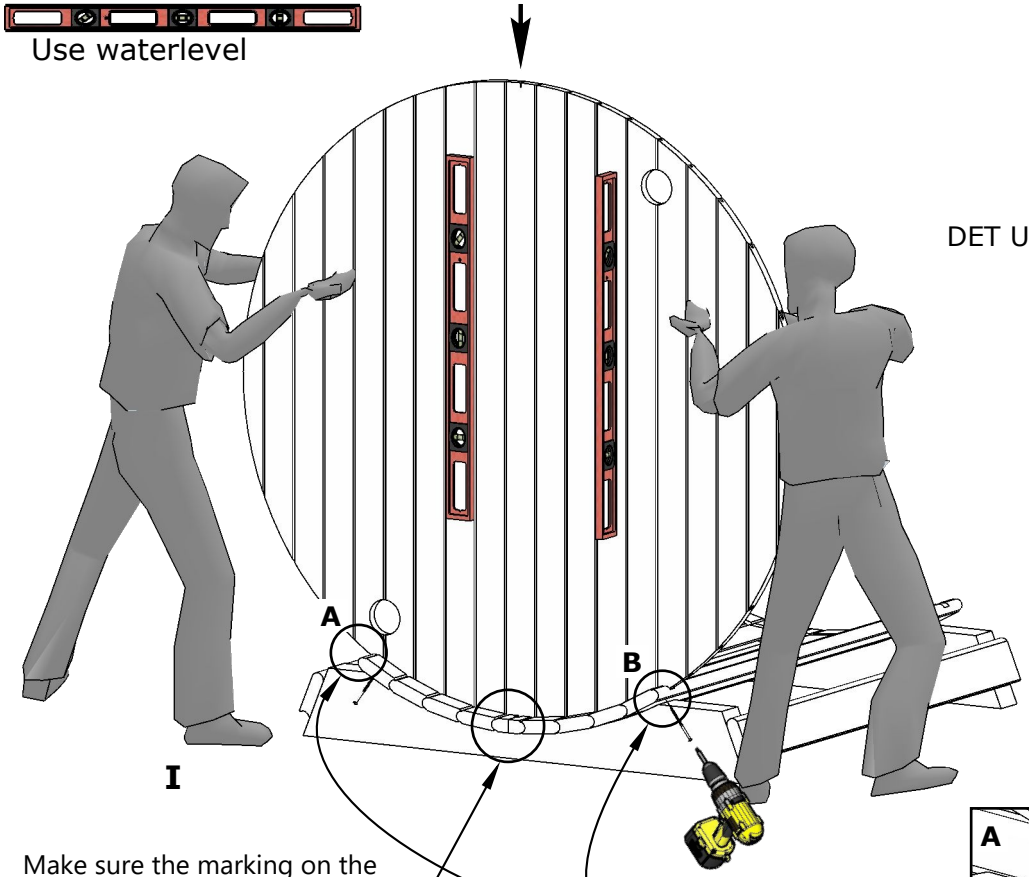

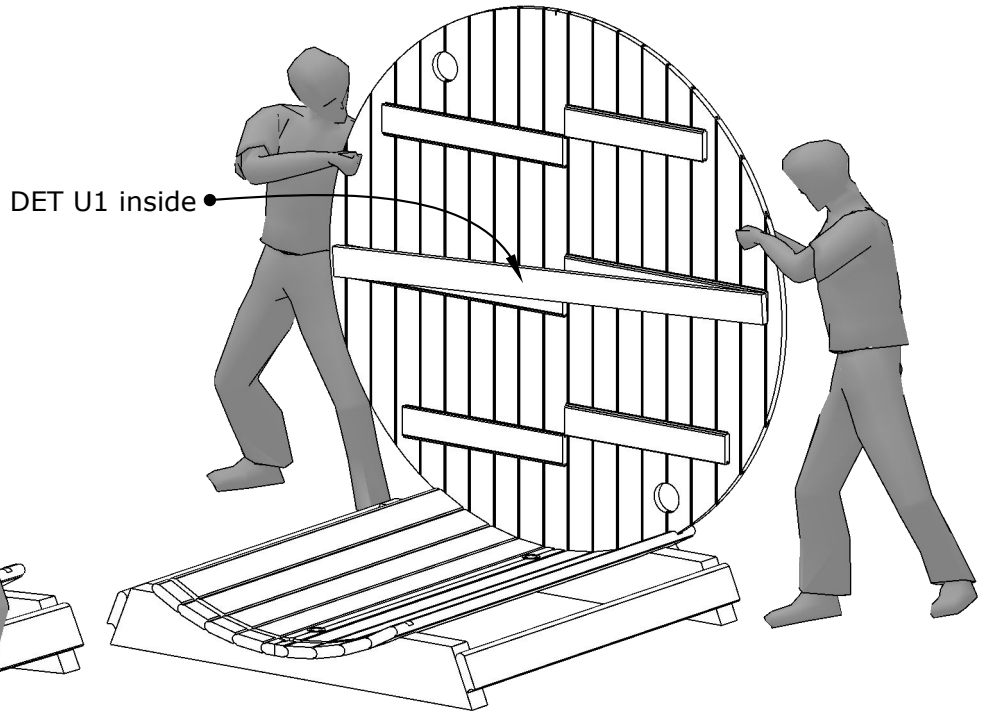

Make sure the marking on the wall is centered in the notch.

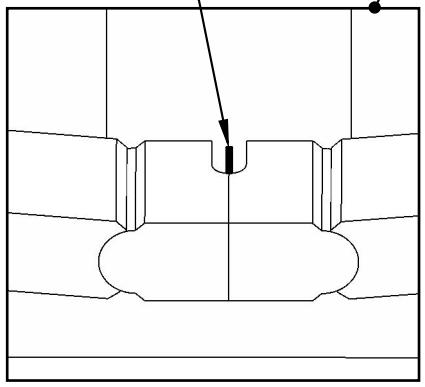

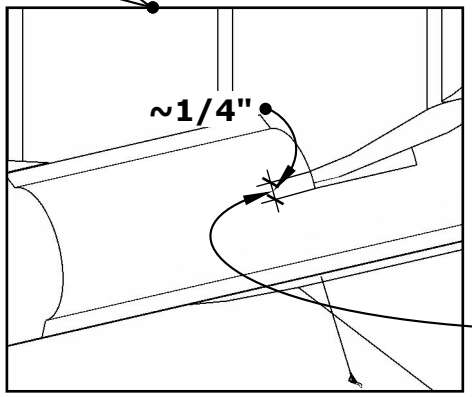

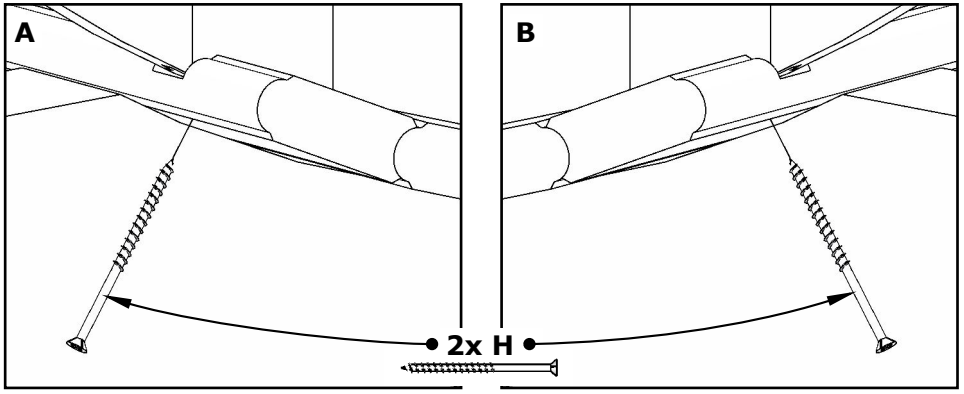

IMPORTANT! Be sure to leave a ~1/4”gap when tightening screws to leave room for adjustment when the outer bands (B) are installed.

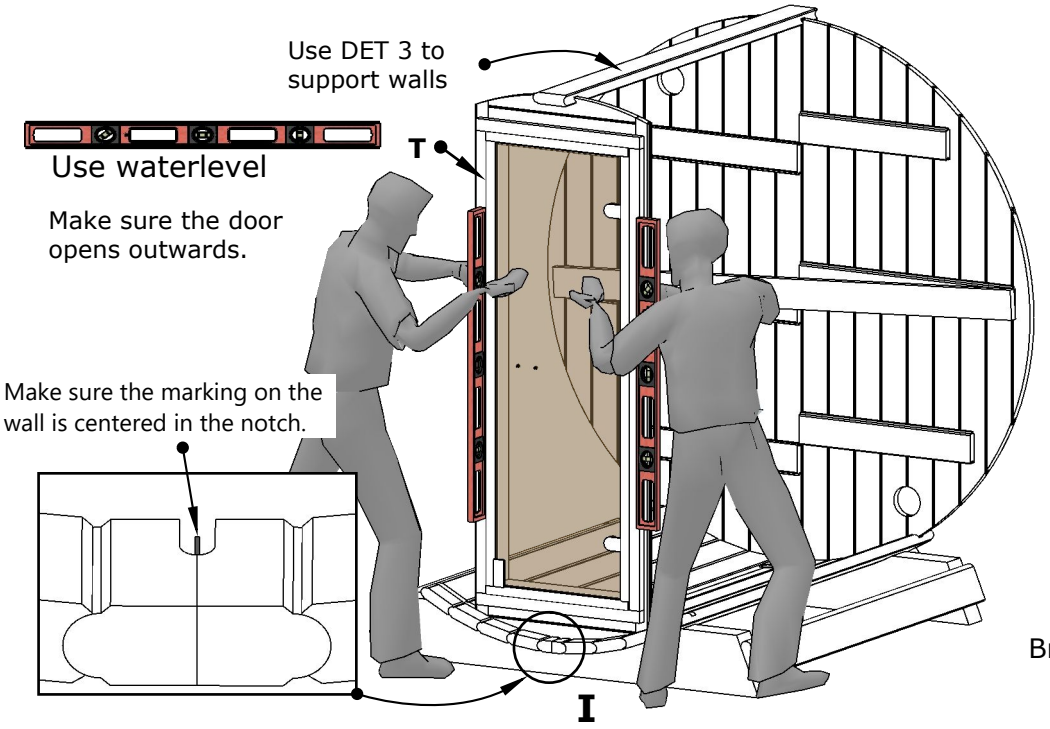
Use DET 3 to support walls
T
Use waterlevel
Make sure the door opens outwards.
Make sure the marking on the wall is centered in the notch.
I

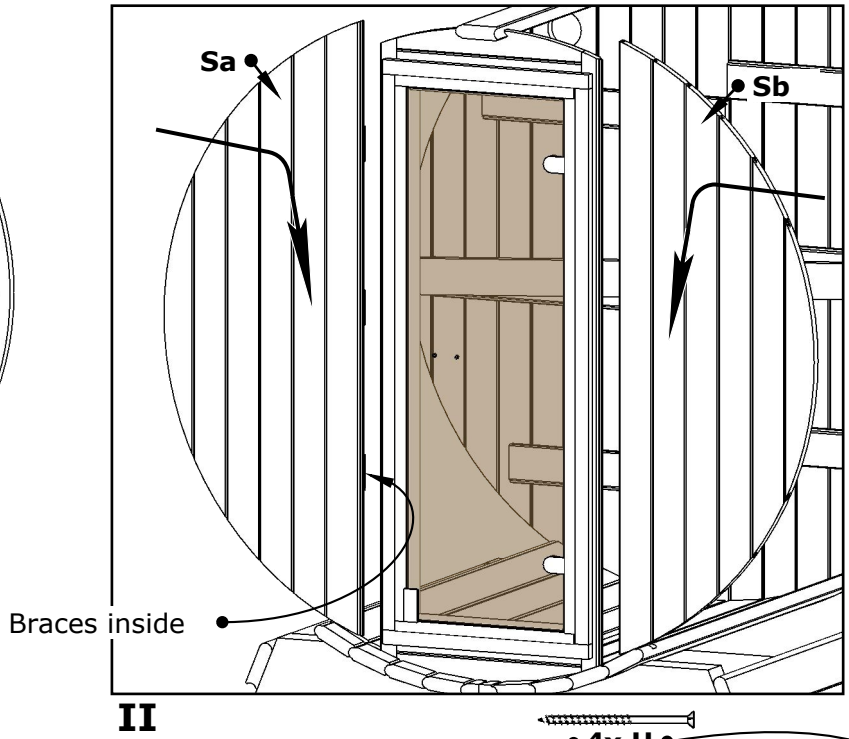
Sa
Sb
Braces inside
II

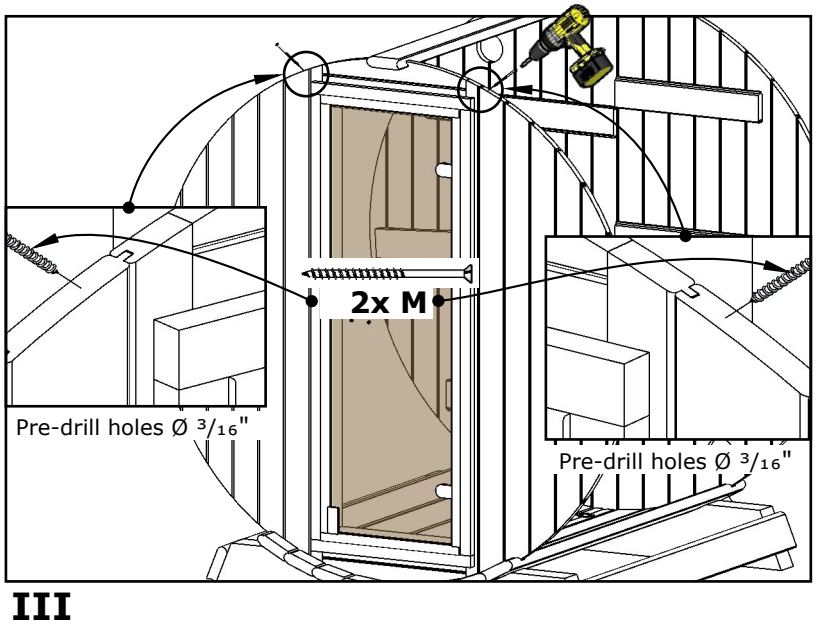
2x M
Pre-drill holes Ø 3/16"
Pre-drill holes Ø 3/16"
III

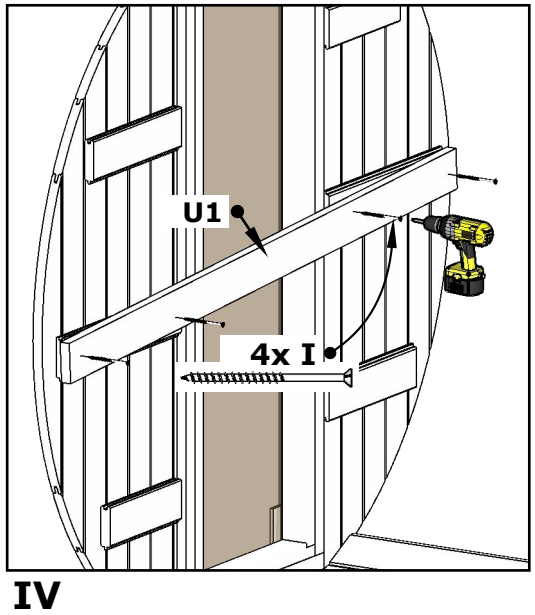
U1
4x I
IV

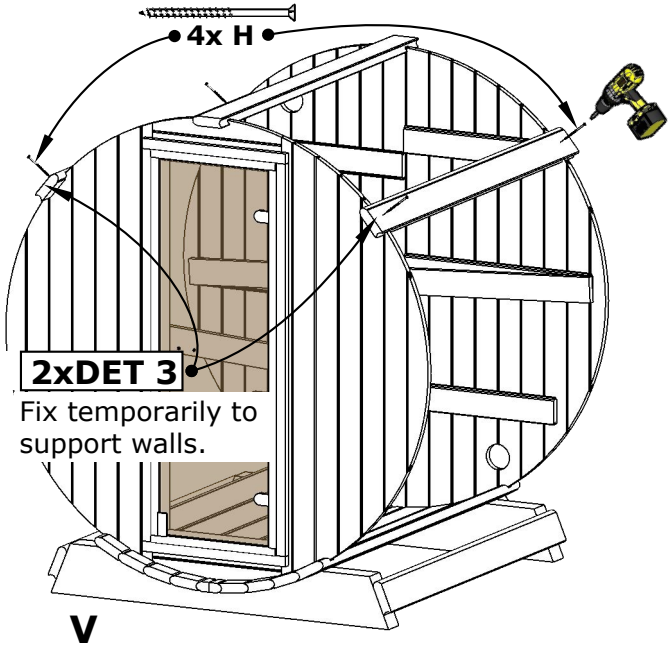
4x H
2xDET 3
Fix temporarily to support walls.
V

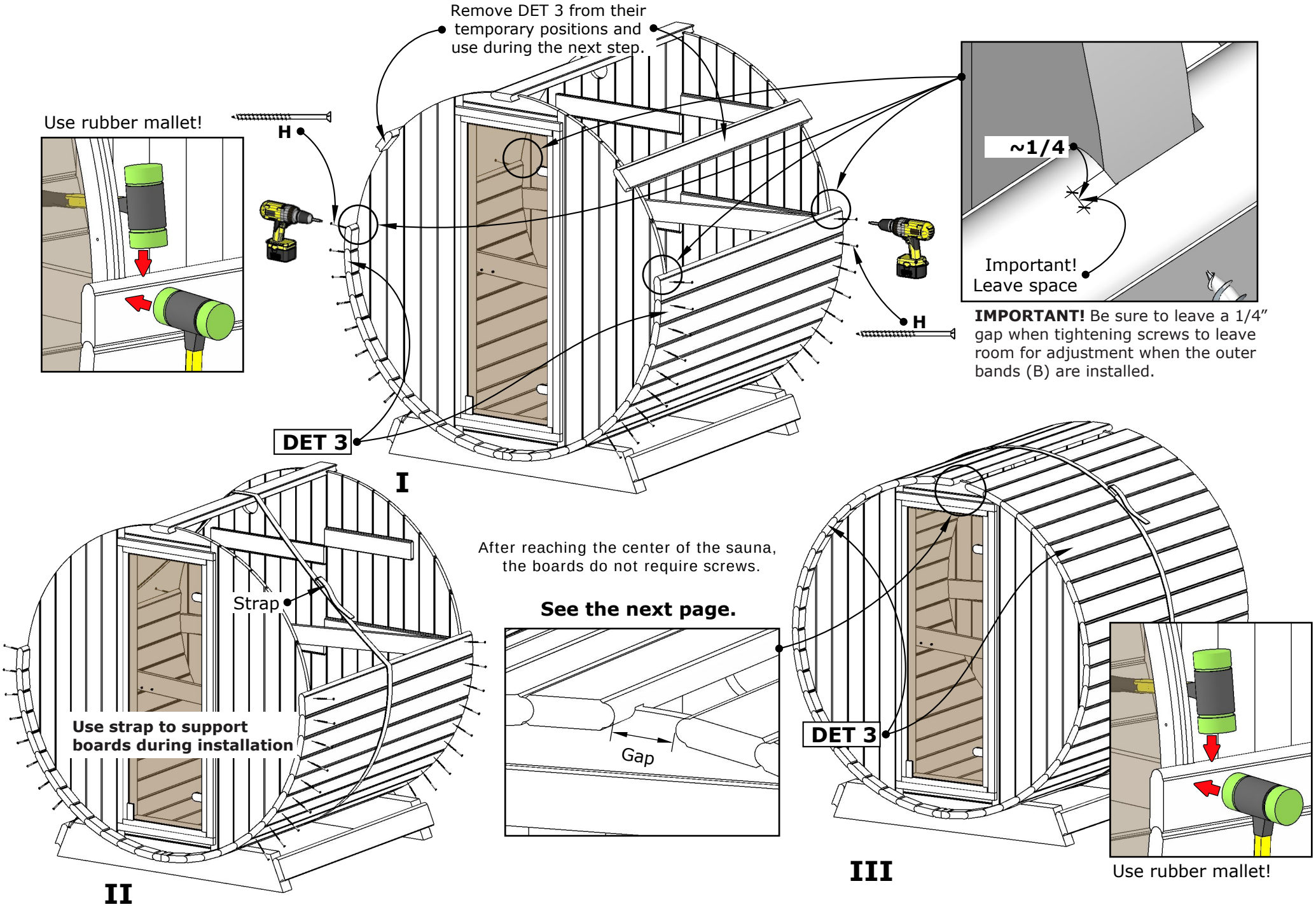
Remove DET 3 from their temporary positions and use during the next step.
Use rubber mallet!
H
H
DET 3
I
~1/4
Important! Leave space
IMPORTANT! Be sure to leave a 1/4" gap when tightening screws to leave room for adjustment when the outer bands (B) are installed.
Strap
Use strap to support boards during installation
II
After reaching the center of the sauna, the boards do not require screws.
See the next page.
Gap
DET 3
III
Use rubber mallet!

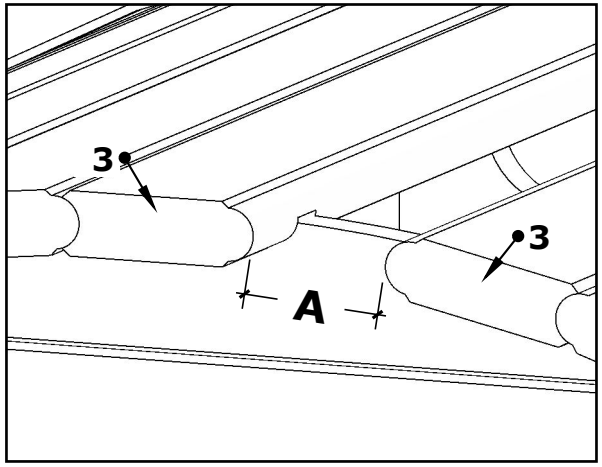

I

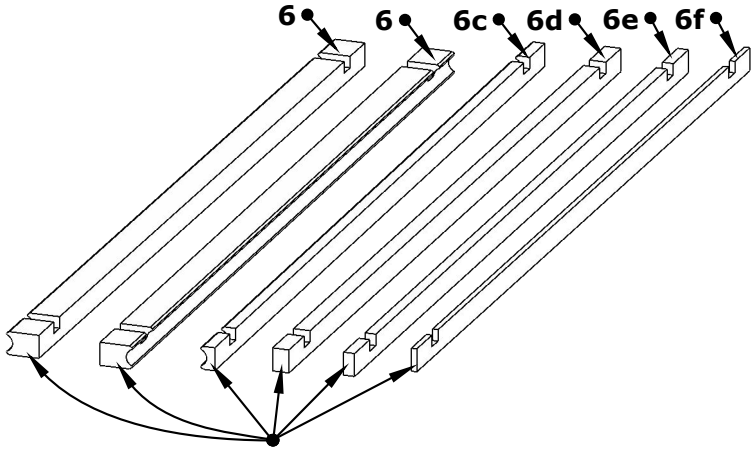

Join boards together (as shown in diagram III) that will bridge the width of the "A" gap. It is recommended that the combined boards are approximately 1/4" wider than the gap.

II

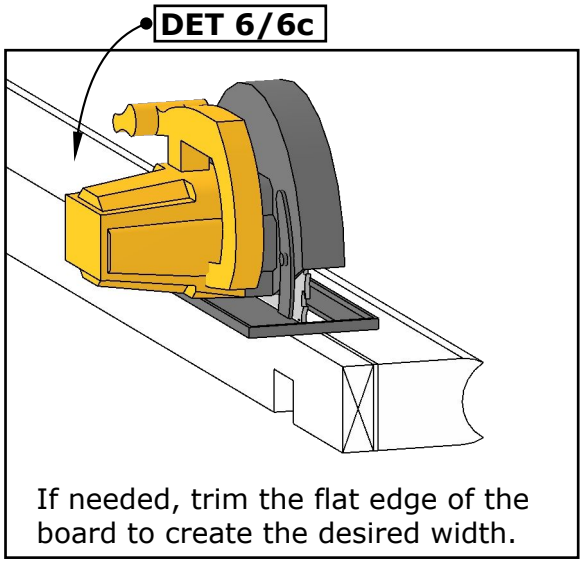

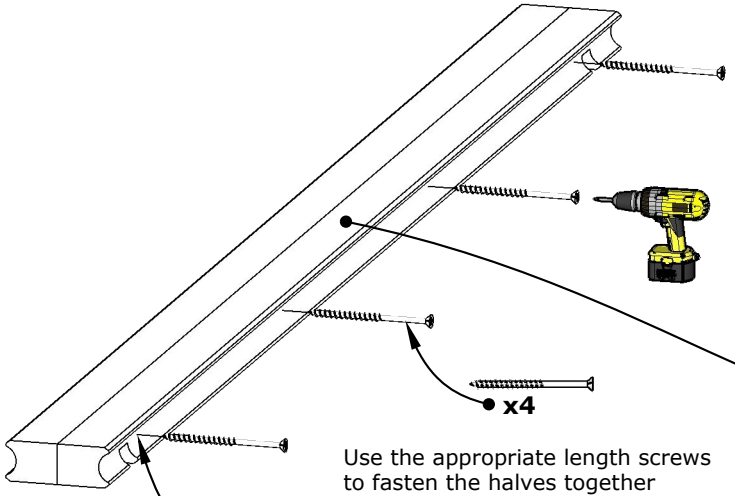

III

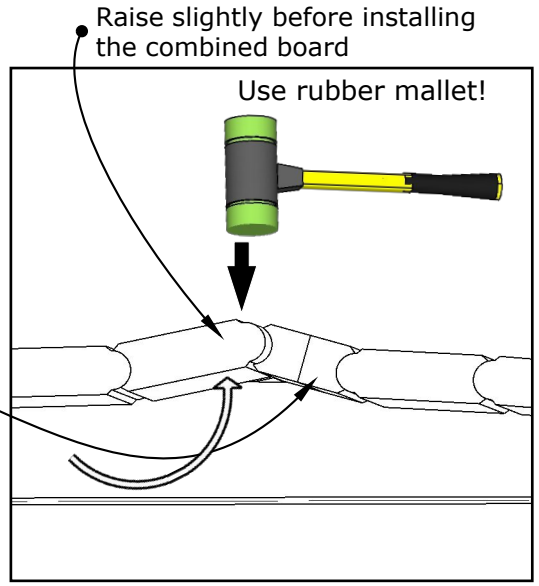

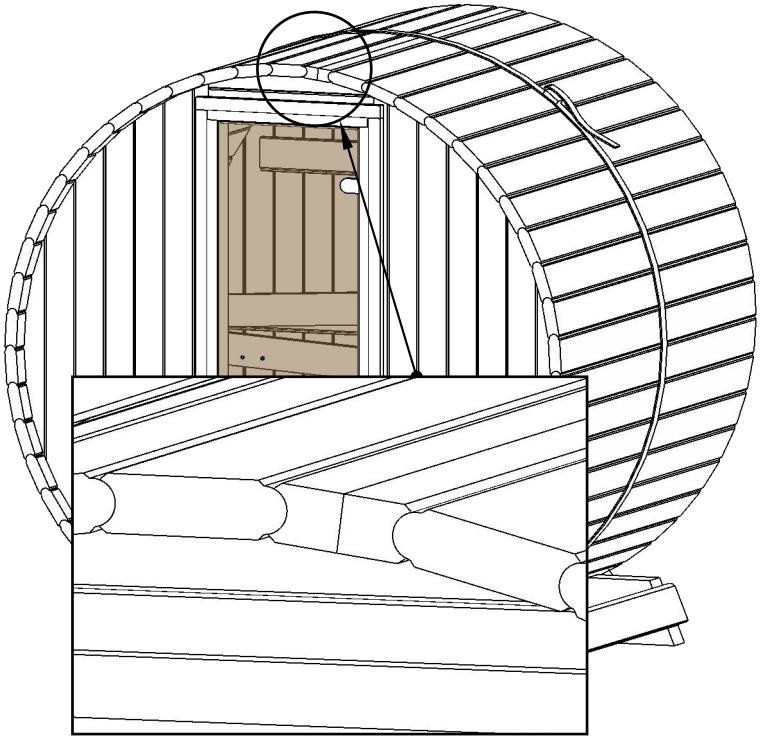

IV

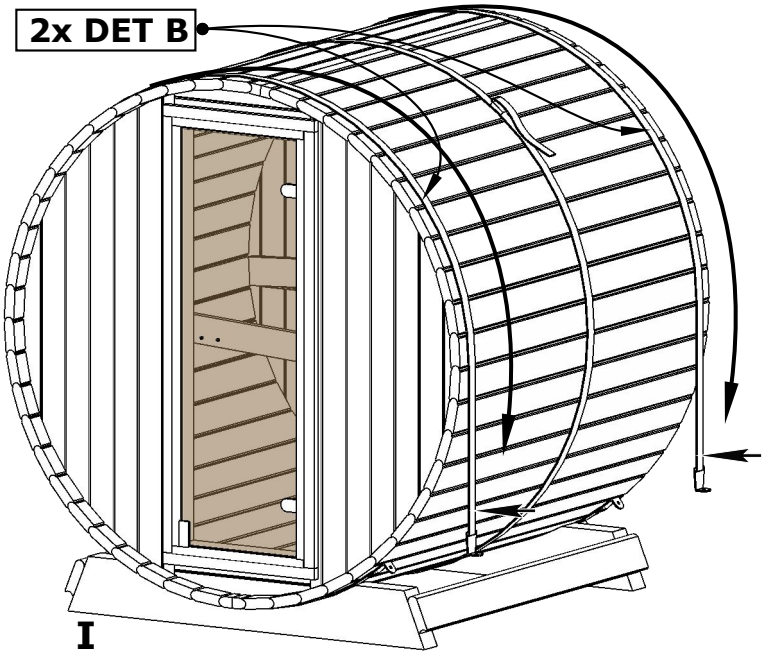

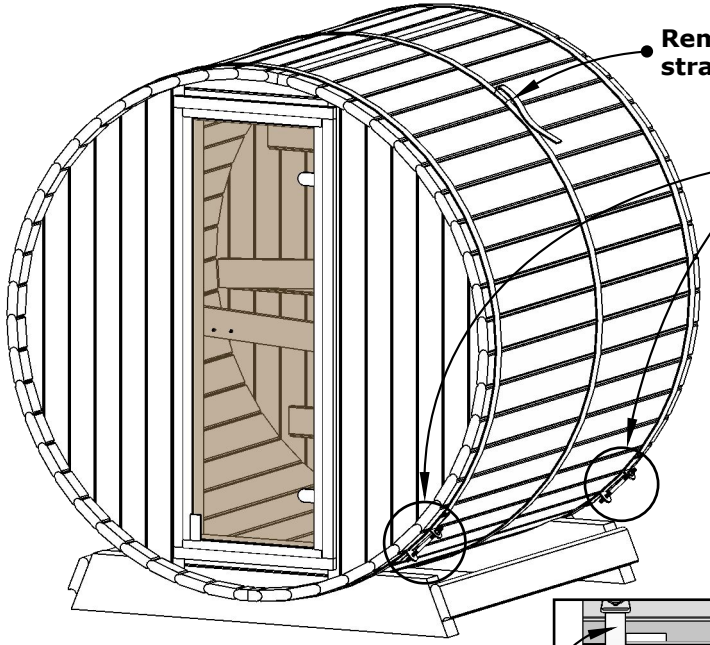

Attention! Tighten all nuts securely!

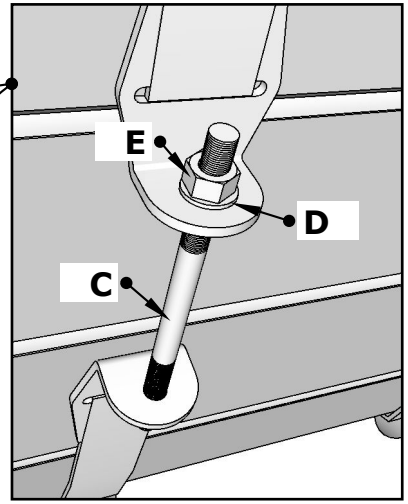

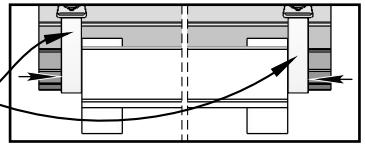

Place the bands around the barrel on the outer side of the cradle.

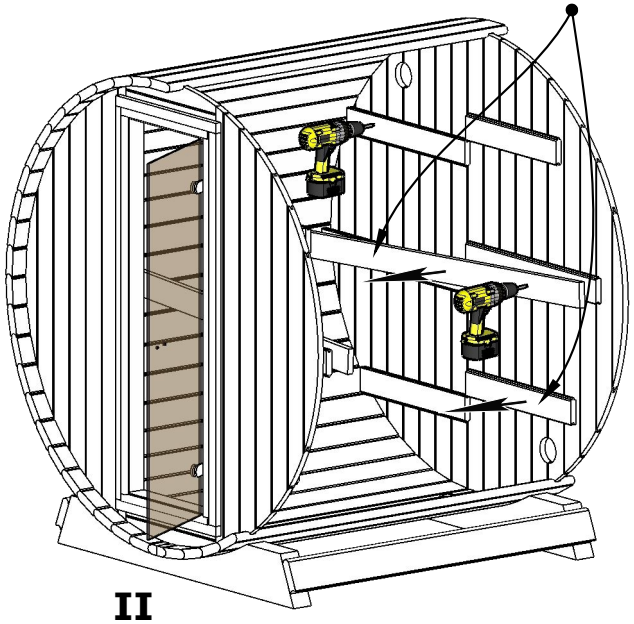

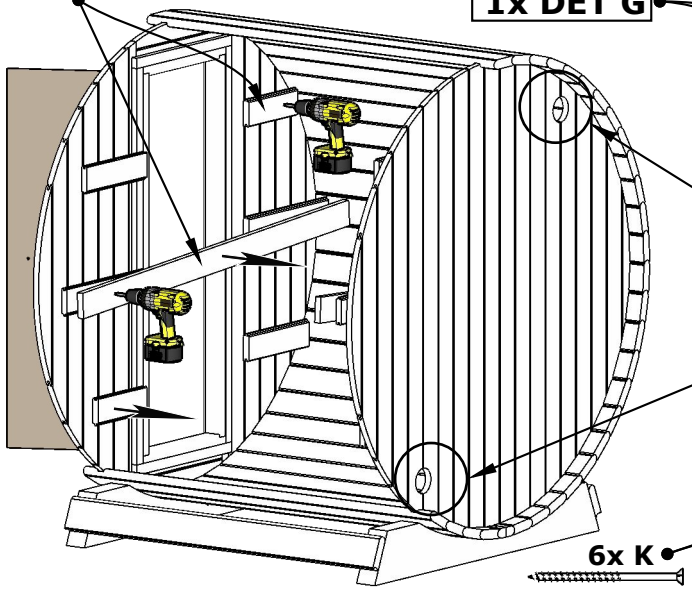

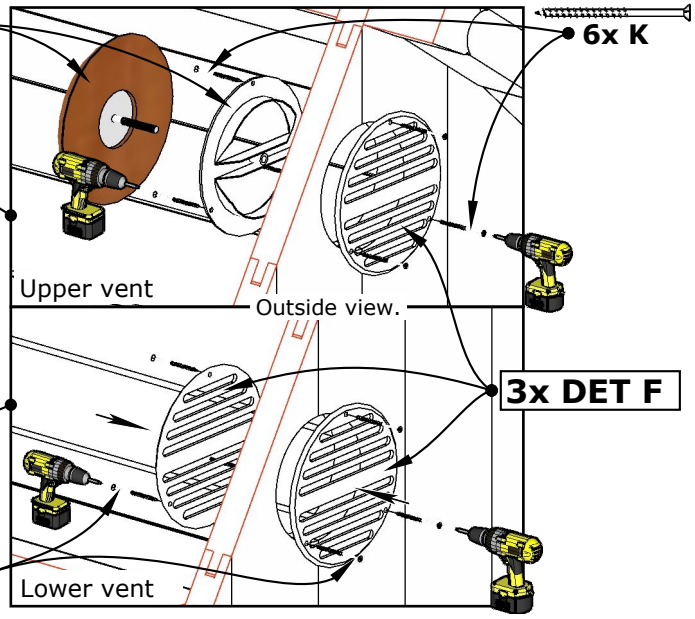

Interior

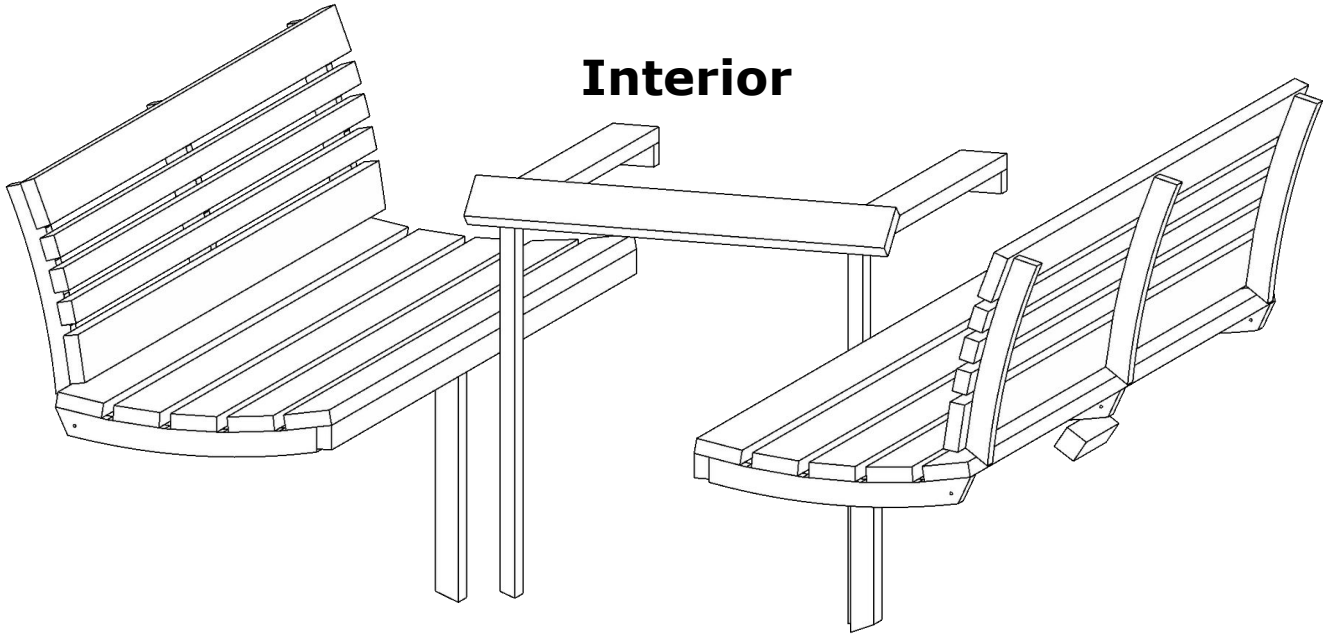

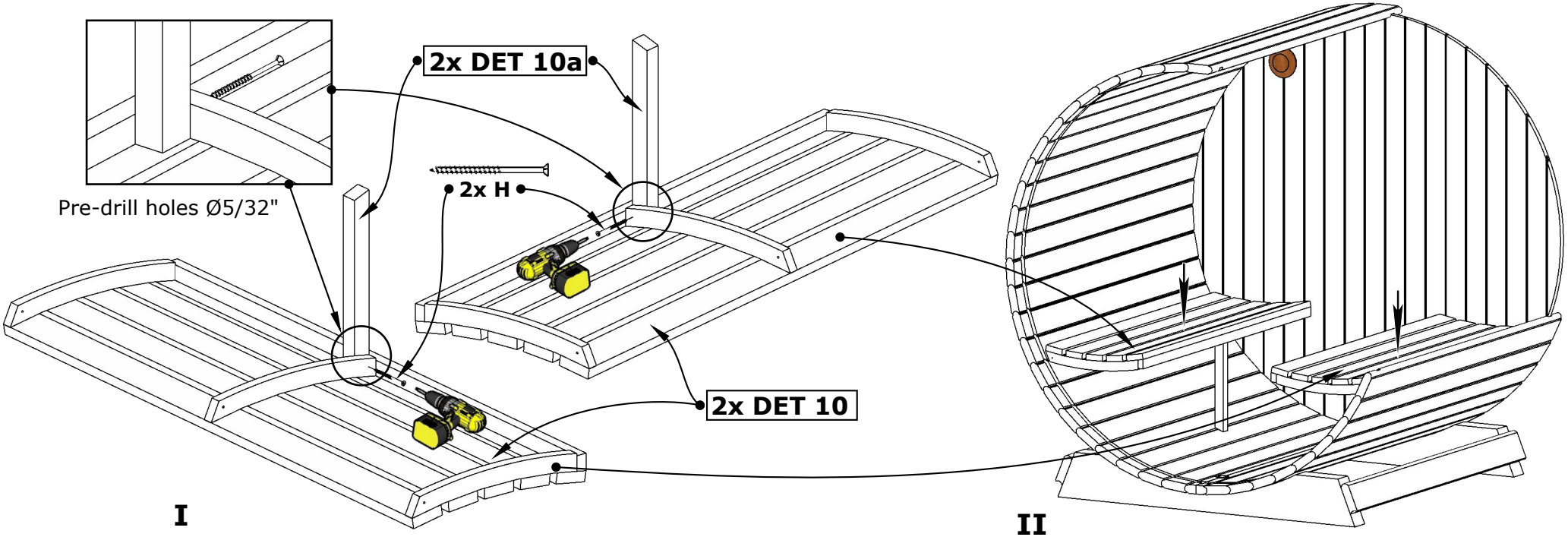

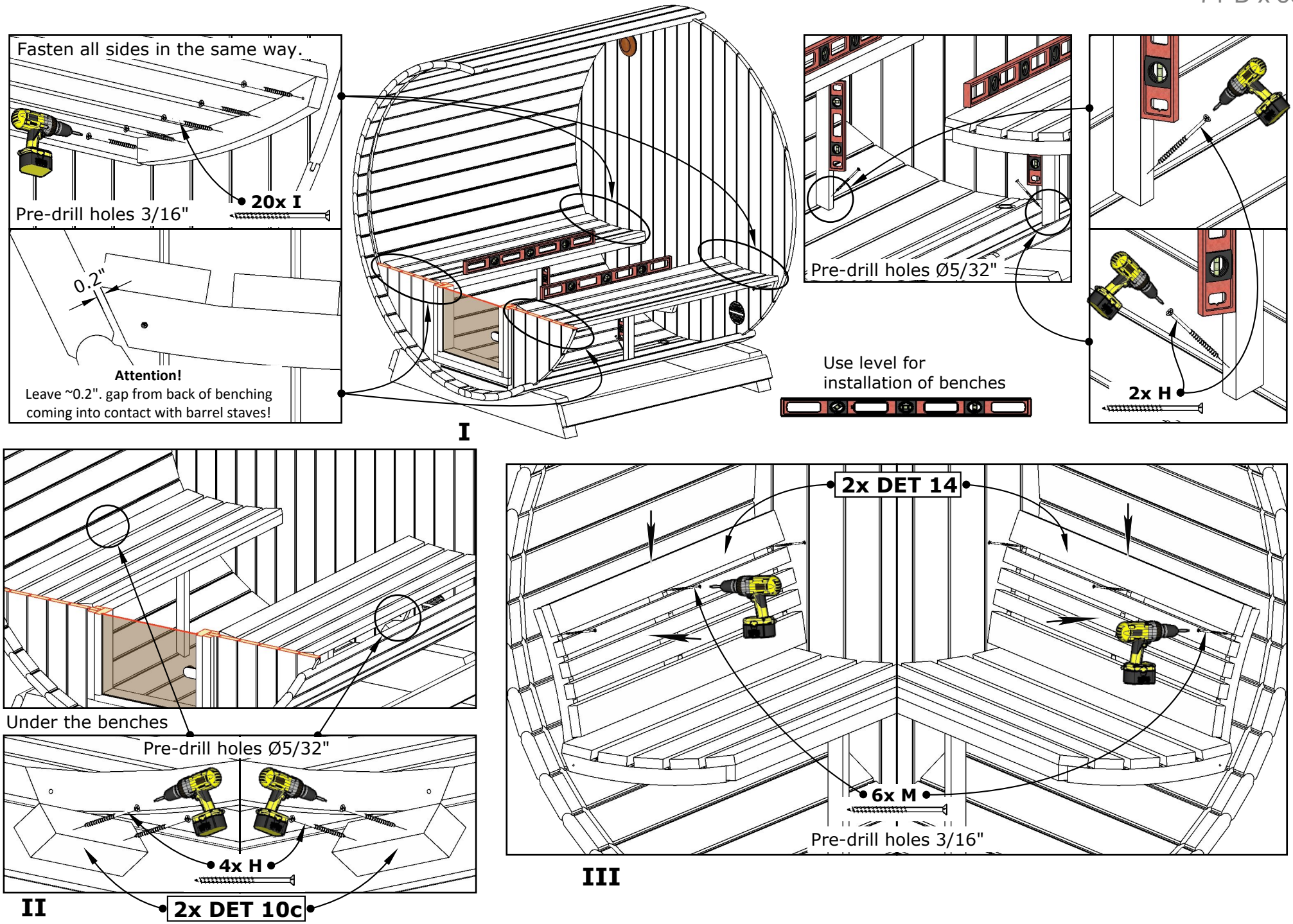
Fasten all sides in the same way.
Pre-drill holes 3/16"
20x I
0.2"
Attention!
Leave ~0.2". gap from back of benching coming into contact with barrel staves!
I
Pre-drill holes Ø5/32"
Use level for installation of benches
2x H
Under the benches
Pre-drill holes Ø5/32"
4x H
2x DET 10c
II
2x DET 14
6x M
Pre-drill holes 3/16"
III

ATTENTION!
HEATER GUARD MAY NOT MEET THE SAFETY DISTANCES OF ALL HEATERS AND SHOULD NOT BE USED IF THE HEATER DOES NOT FIT!

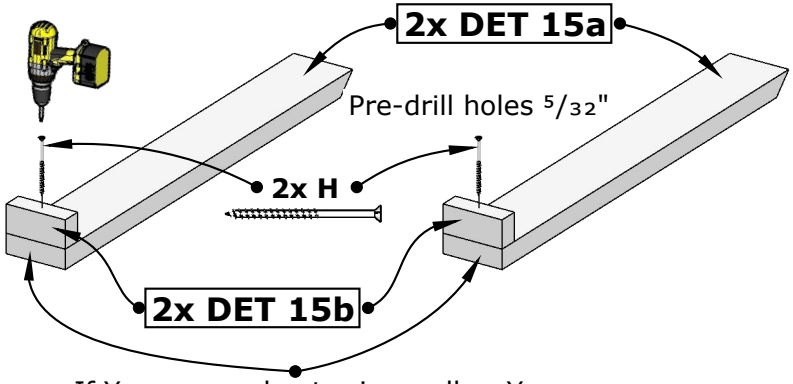

If Your sauna heater is smaller, You can cut DET 15a to lenght from the non-tapered end to better fit your heater.

I

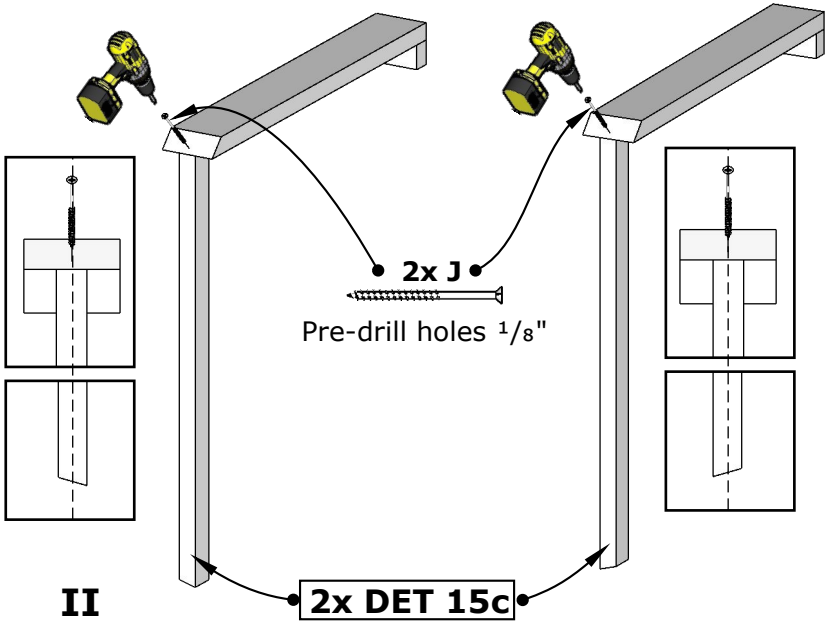

II

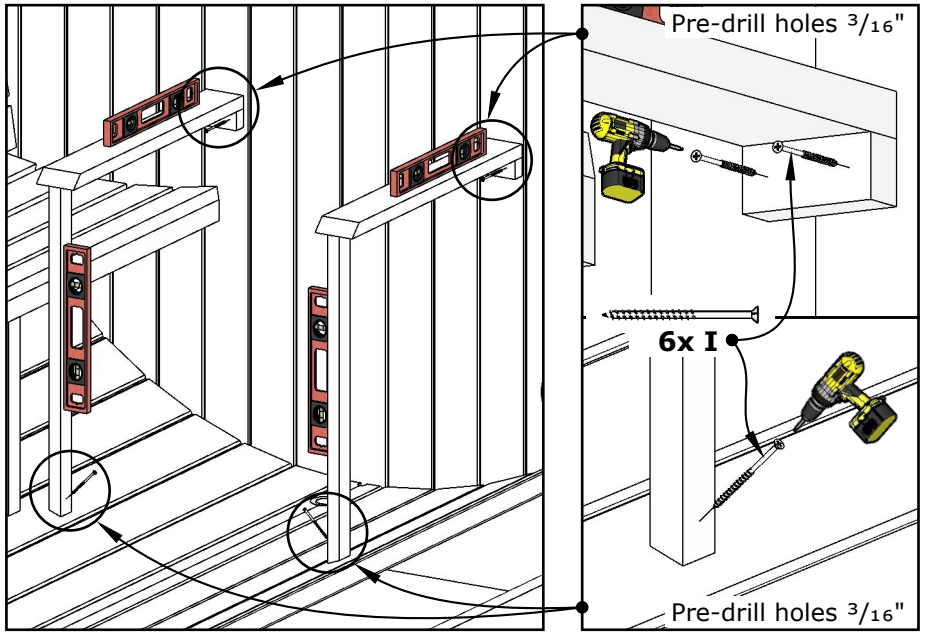

III

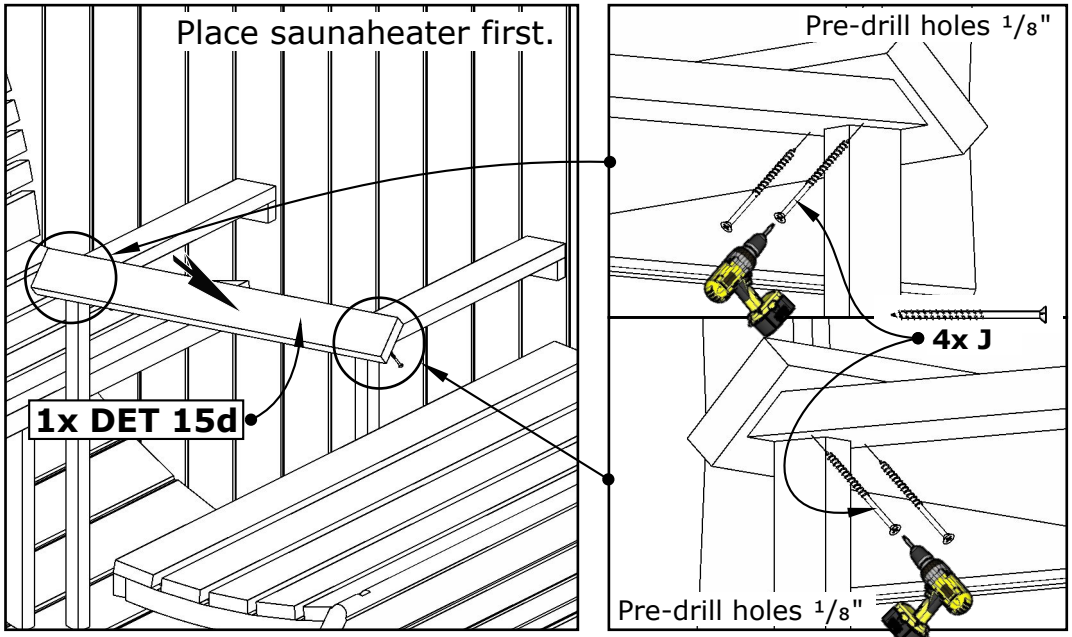

IV

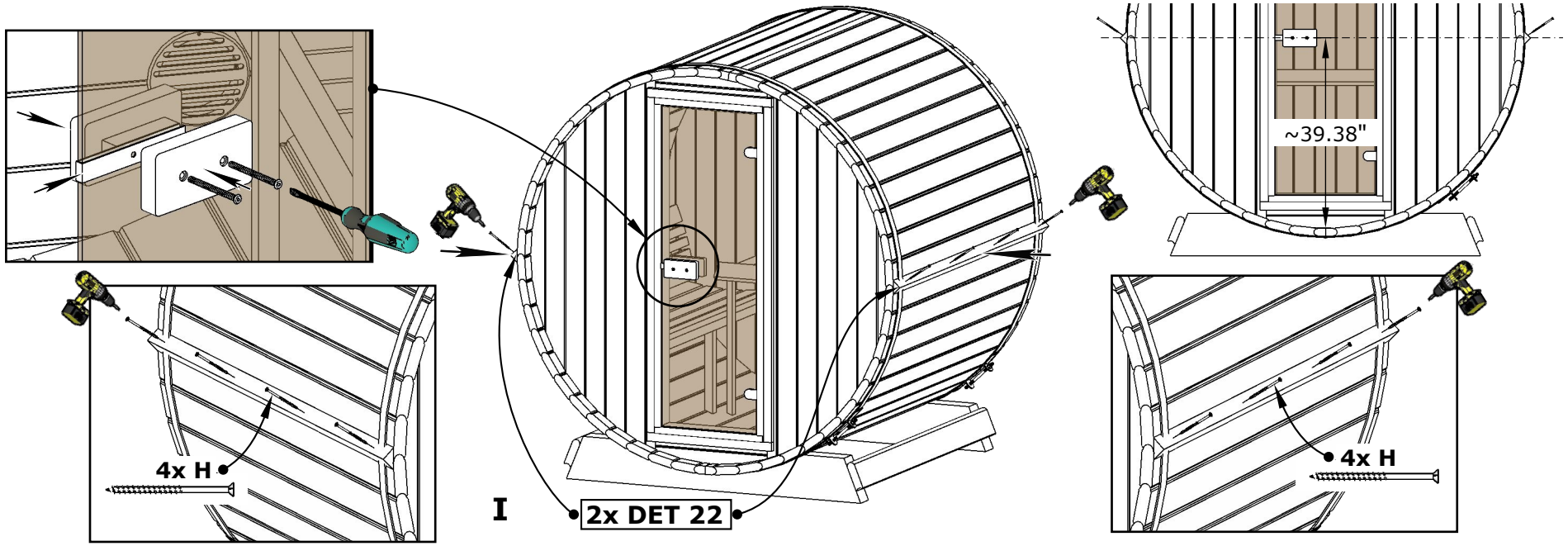
~39.38"
4x H
4x H
I
2x DET 22

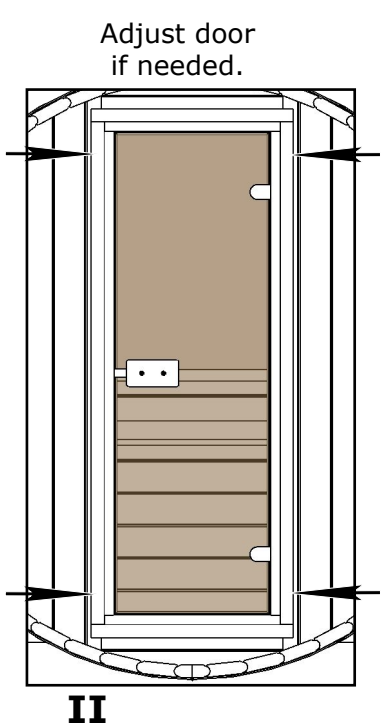
Adjust door
if needed.
II

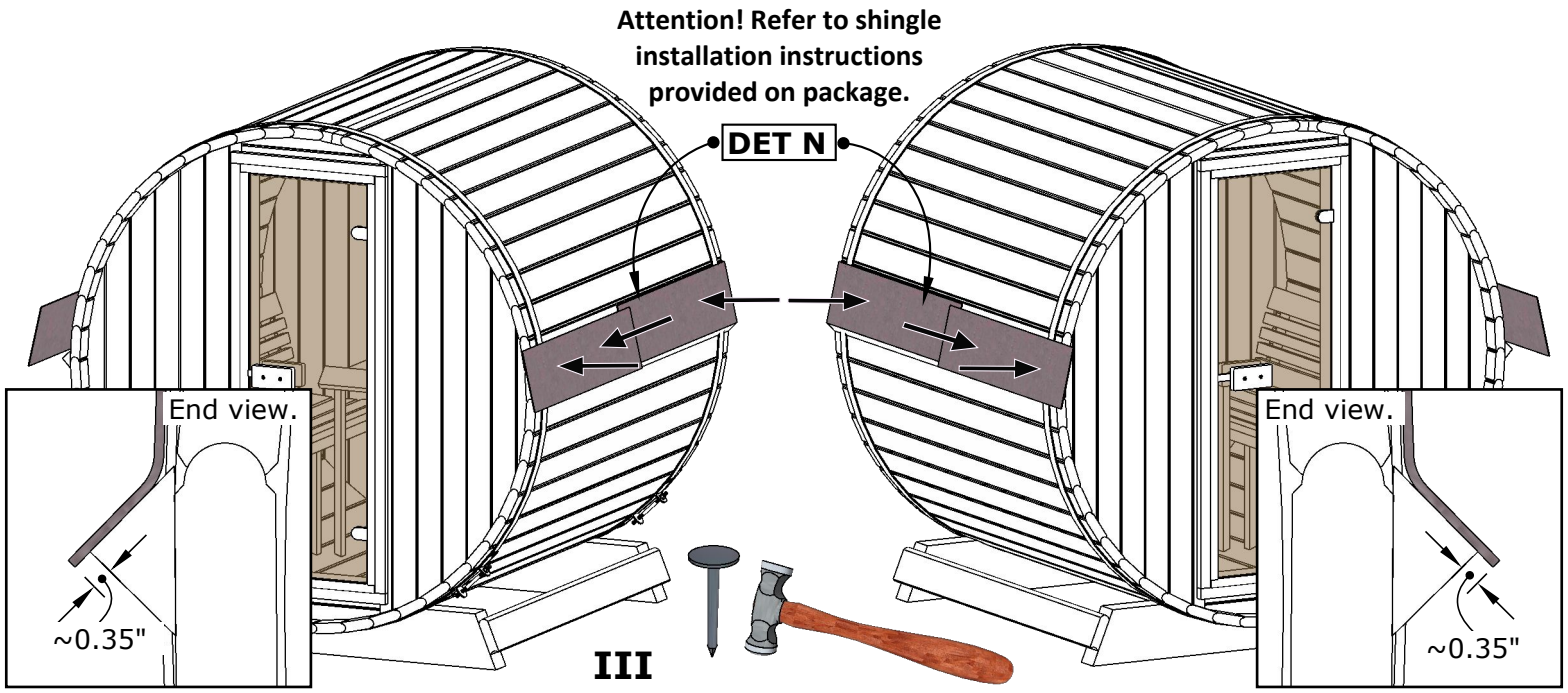
Attention! Refer to shingle
installation instructions
provided on package.
DET N
End view.
~0.35"
End view.
~0.35"
III

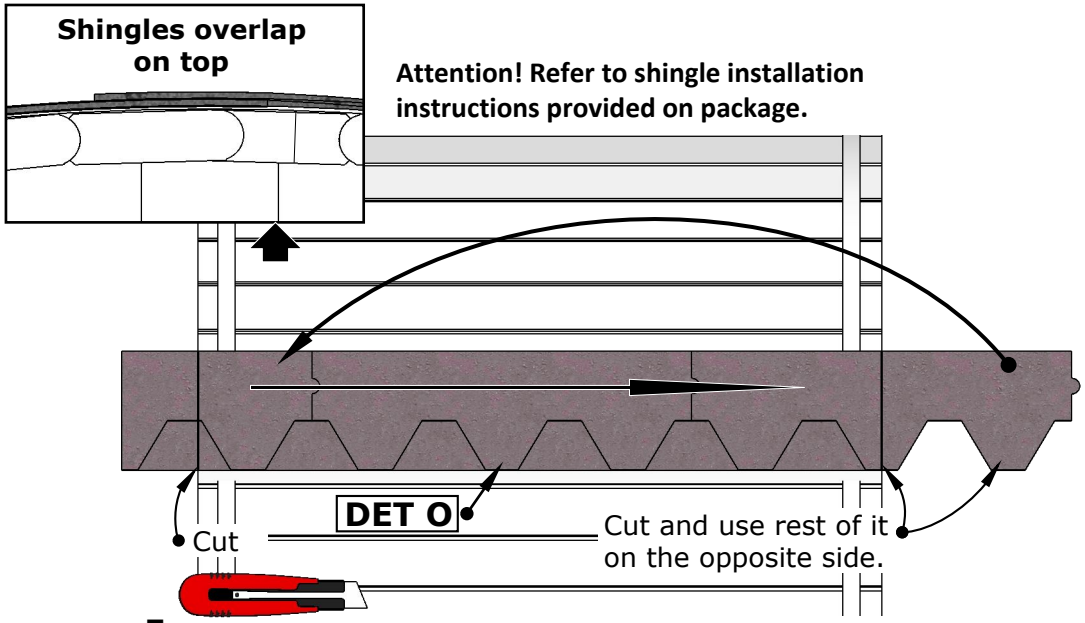

I

Attention! Refer to shingle installation instructions provided on package.

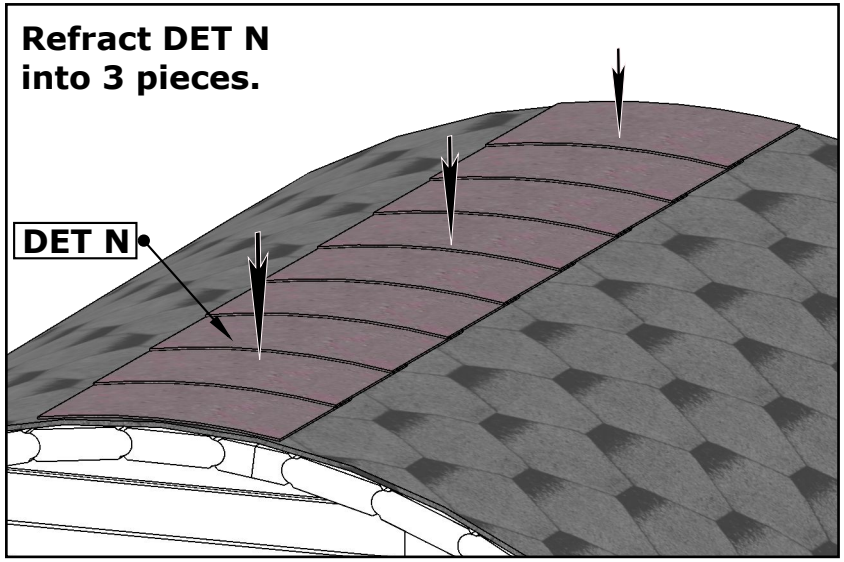

II

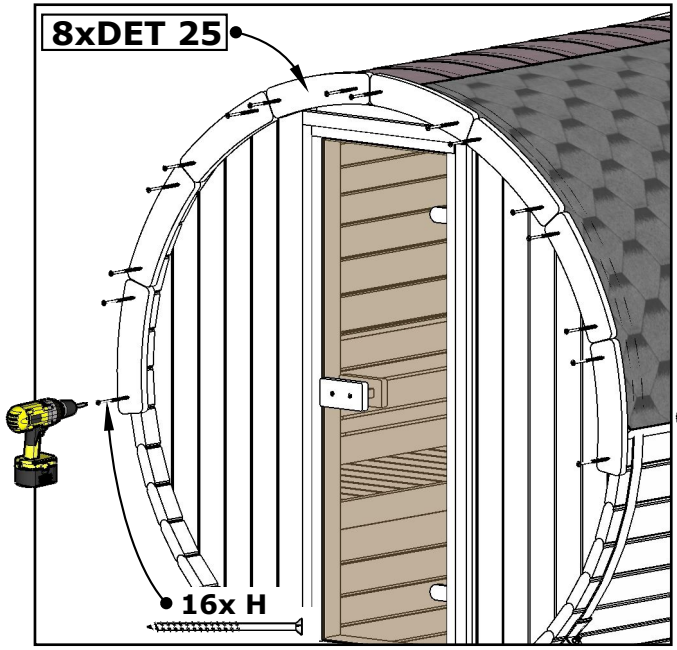

III

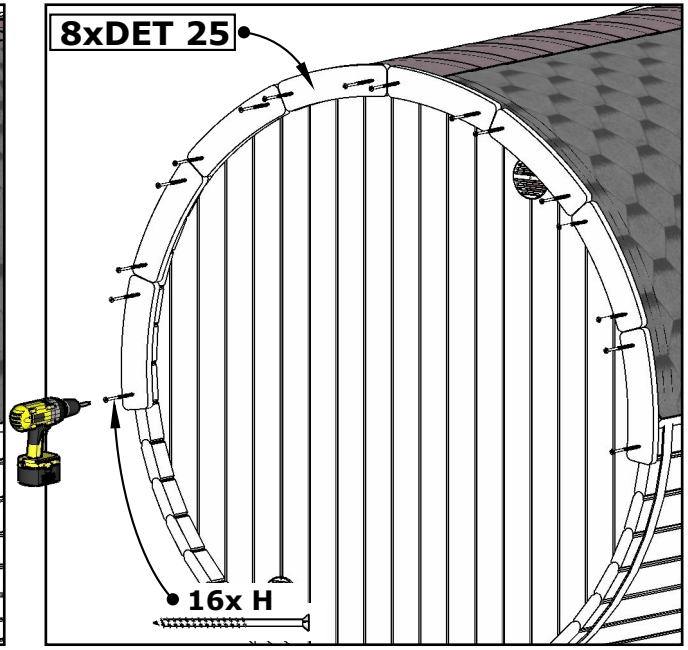

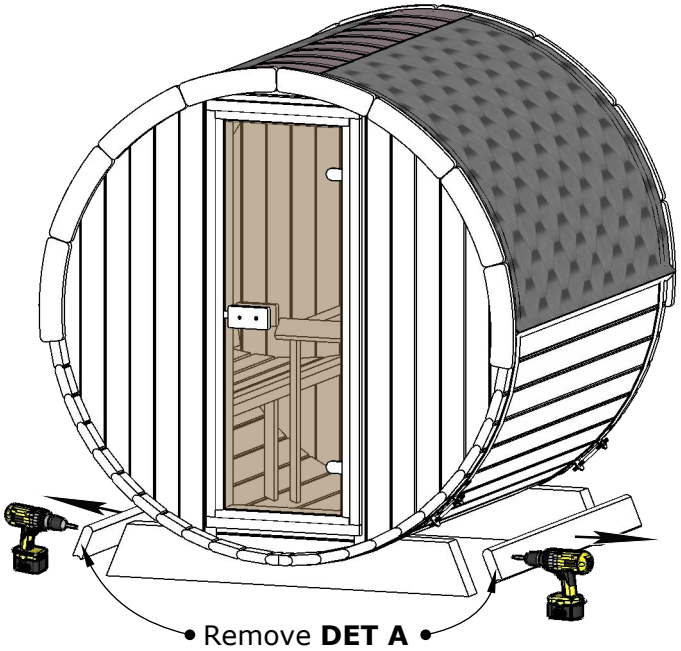

Installation Instructions

When building a wooden product, it is important to follow all installation instructions to ensure the quality and durability is guaranteed.

Important!

Identification number of the Product / **Serial Number:** **123456789**

Must be accompanied by the serial number to identify the product.

General Installation

- **Careful handling:** Treat all wooden parts with care during assembly to avoid scratches or friction.
- **Level foundation:** Ensure the sauna sits on a stable, level foundation for proper door and window operation. Ensure the base has enough stability to support the sauna.
- **Proper drainage:** Avoid constant water exposure to wooden materials.
- **Electrical and plumbing:** Hire qualified professionals for electrical work, including heater and lighting installation.
- **Wood treatment:** To ensure optimal performance and longevity of your Sauna, proper wood treatment is crucial. We strongly recommend treating all wooden components with a wood preservative. This includes unfinished skirting boards, if applicable, which should be treated immediately upon assembly.

Door and Window Maintenance

- **Regular checks:** Regularly inspect window and door hinges and locks. Tighten loose components and lubricate as needed.

- **DOOR ADJUSTMENT INSTRUCTIONS**

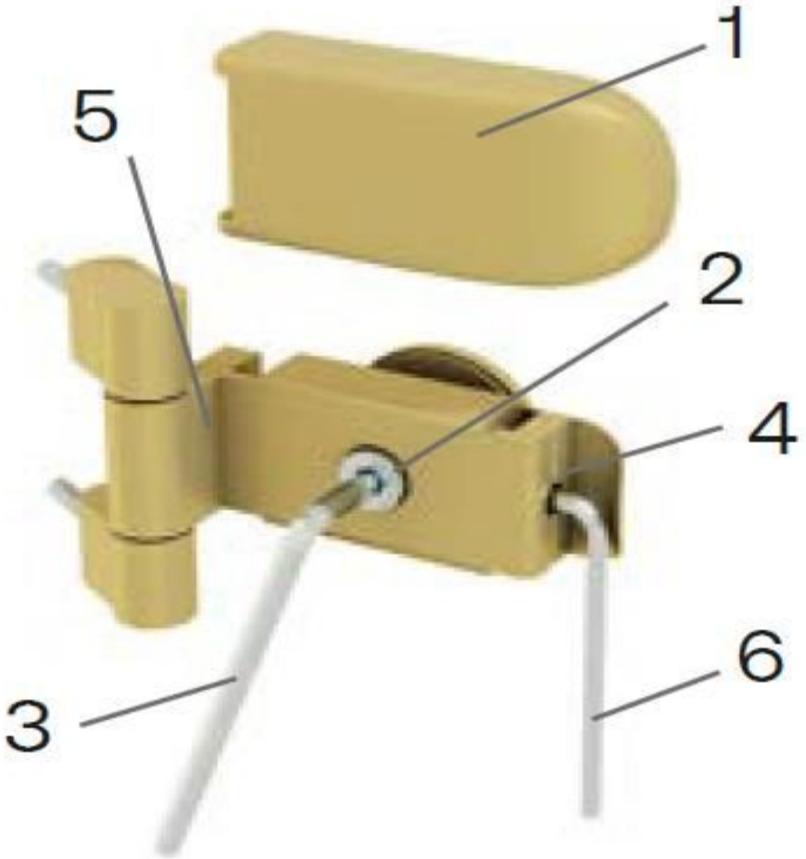

- You will need 3-mm (6) and 5-mm (3) hexagon keys for adjusting the hinges. Remove the plastic covers from the hinges (1). Loosen the fixing screws (2) one turn (do not remove the glass). If needed, the door can be shimmed up a bit from here vertically. If it needs to be adjusted left or right, turn the screws (4 & 5) as required. If one screw is turned counterclockwise, the other must be turned clockwise. Make sure both screws are tight when you have completed this step. Then tighten the fixing screws (2) when adjusted.

Technical Support
(224) 253-5909