Ergo Series E8W Barrel Sauna
Half Glass Window 87"D x 85"H

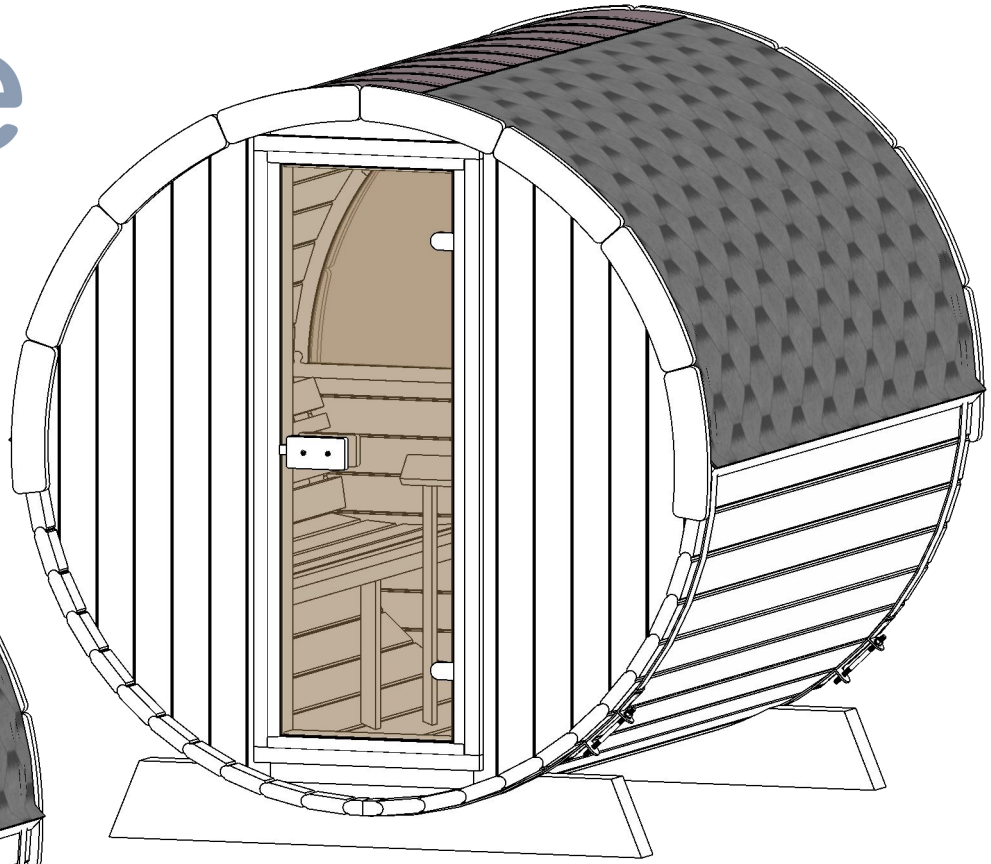

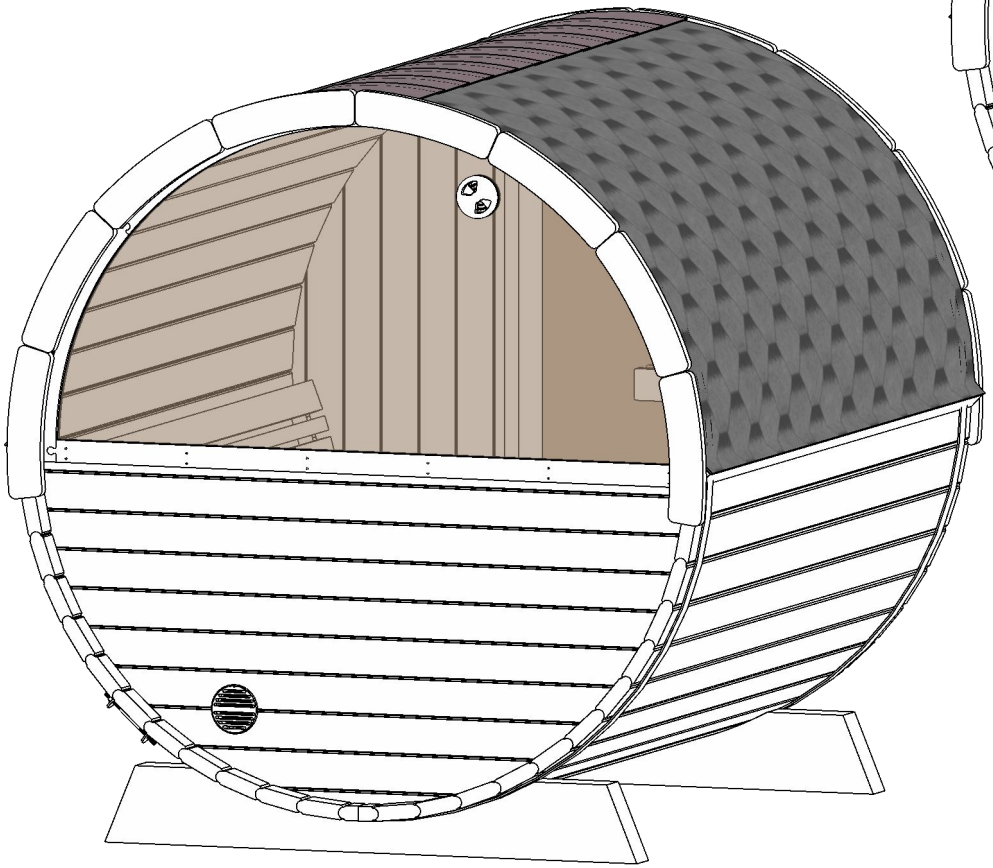

Note: Please read manual before construction

260701

Tools needed

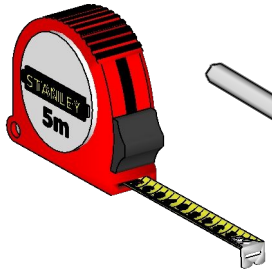

Measuring tape

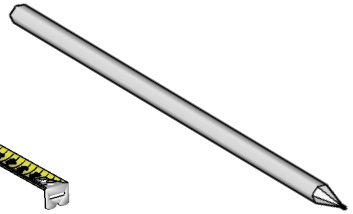

Marker pen

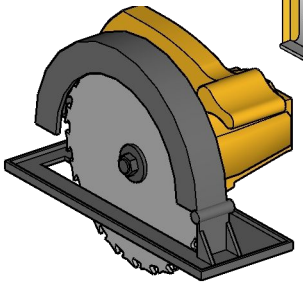

Circular saw

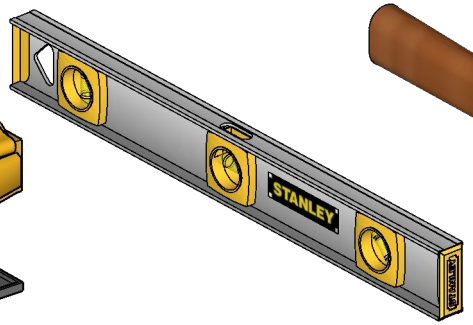

Water level

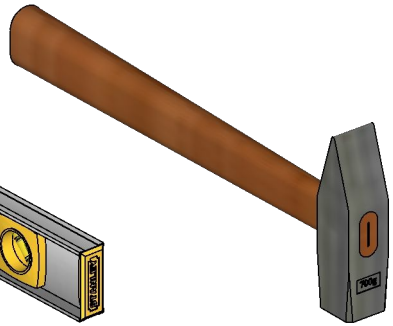

Hammer

Extra hands

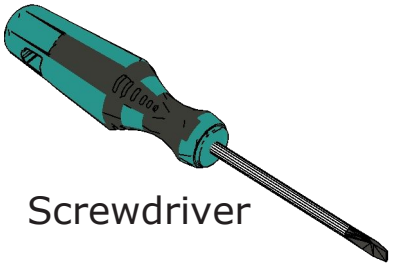

Screwdriver

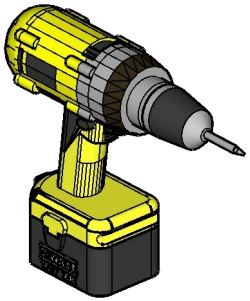

Drill

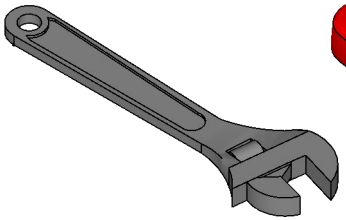

Cresent wrench

Utility knife

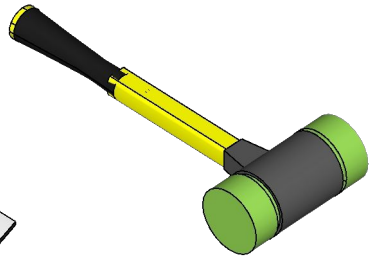

Rubber mallet

Ratchet strap

Details list 1/3

DET 1 ***Article.*** *K-PT-JAL-200D*	**x2**	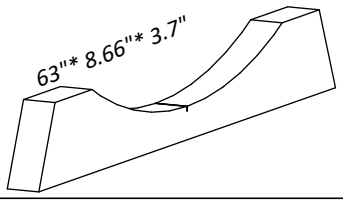	
DET A ***Article.*** *K-STL117/2000*	**x2**	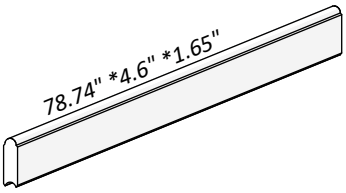	
DET 2 ***Article.*** *T-STL117/2200XLM02*	**x1**	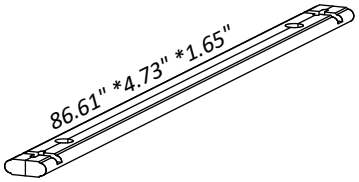	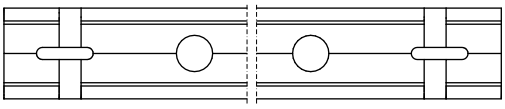
DET 3 ***Article.*** *T-STL117/2200-02*	**x59**	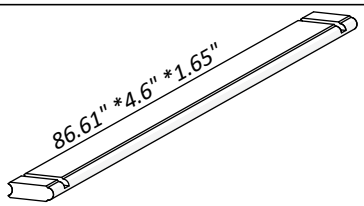	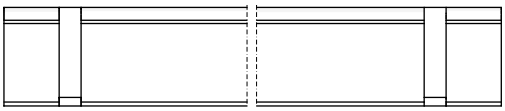
DET 6 *Det.2 jääk* ***Article.*** *T-STL117/2200XL-02*	**x2**	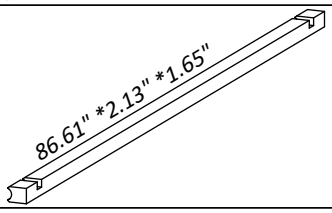	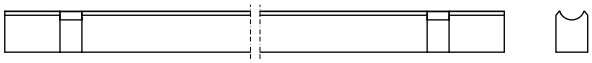
DET 6c/d/e/f *Lõika 1-st STL-st* ***Article.*** *T-STL117/2200KO-02*	**x1**	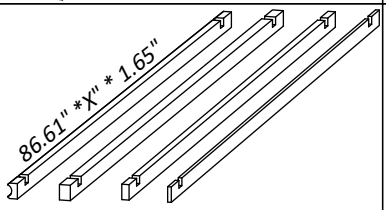	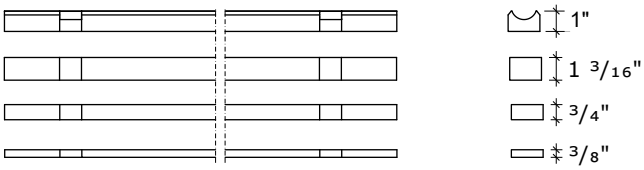
DET Y1 ***Article.*** *T-20-PK/28F12*	**x1**	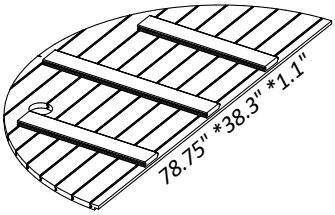	
DET Y2 ***Article.*** *20-PK-PR-12/15*	**x1**	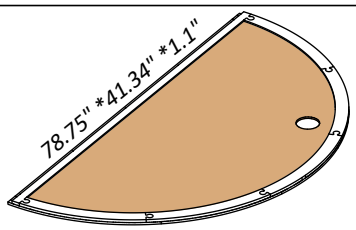	
DET T ***Article.*** *U-KL-6/17-KO*	**x1**	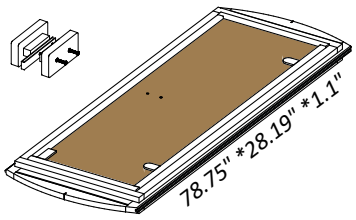	

Details list 2/3

DET Sa ***Article.*** *T-20-PES/28-01P*	**x1**	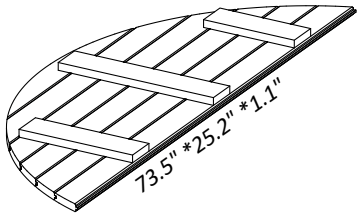	
DET Sb ***Article.*** *T-20-PES/28-01V*	**x1**	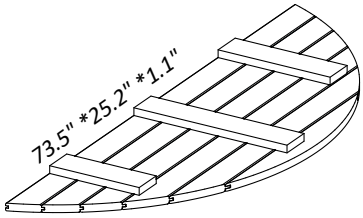	
DET U1 ***Article.*** *K-TL94/1900*	**x2**	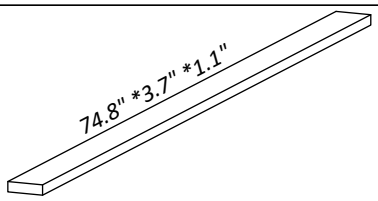	
DET 10 ***Article.*** *TL-LAMOD-1991-KA01*	**x2**	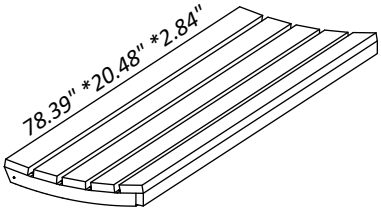	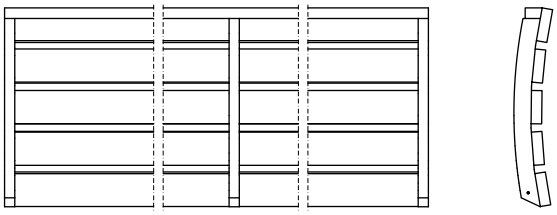
DET 14 ***Article.*** *TL-STMOD-1960-KA01*	**x2**	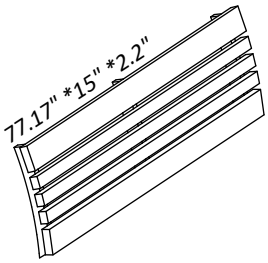	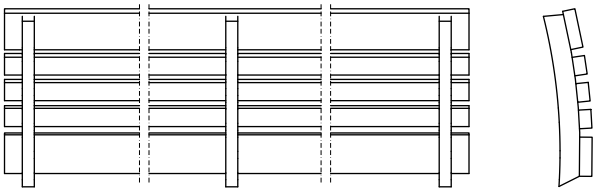
DET 10a ***Article.*** *K-HP44/470XP-XP*	**x2**	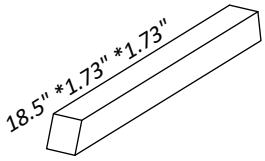	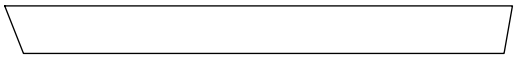
DET 10c ***Article.*** *K-HP44/170*	**x2**	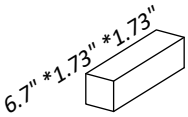	
DET 15a ***Article.*** *TL-LAV90/670XP*	**x2**	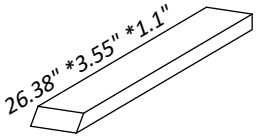	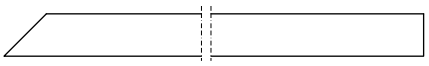
DET 15b ***Article.*** *TL-LAV42/90*	**x2**	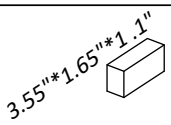	
DET 15c ***Article.*** *TL-LAV42/700XP*	**x2**	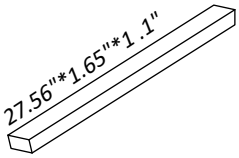	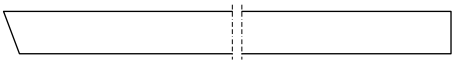

Details list 3/3

DET 15d ***Article.*** *TL-LAV90/800*	**x1**	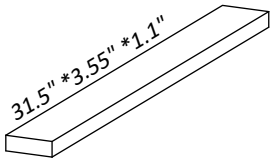	
DET 22 ***Article.*** *T-STL-2200-XX*	**x2**	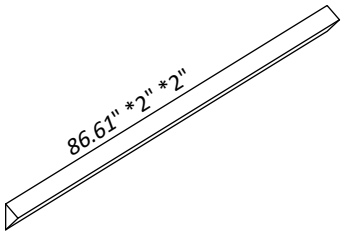	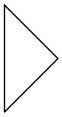
DET N ***Article.*** *KAT-HAR-MUST*	**x9**	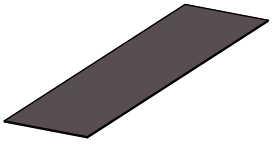	
DET O ***Article.*** *KAT-SIN-MUST*	**x63**	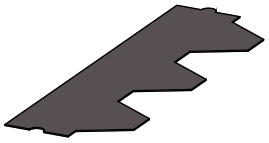	
DET 25 ***Article.*** *MU-OL-SAUN*	**x16**	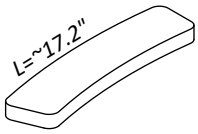	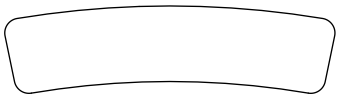
DET W ***Article.*** *MU-TRAPP*	**x2** kmpl	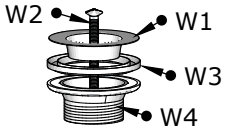	
DET B ***Article.*** *MU-VIT6220-KLZN*	**x2**	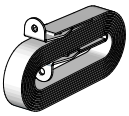	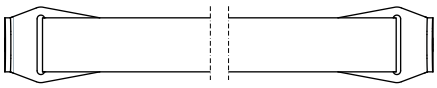
DET Z ***Article.*** *MU-VENT-100-VIN*	**x1**	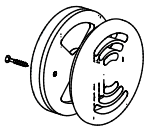	
DET F ***Article.*** *MU-VENT-100-ZN*	**x2**		

Article.
KI-KERL-12-RV2

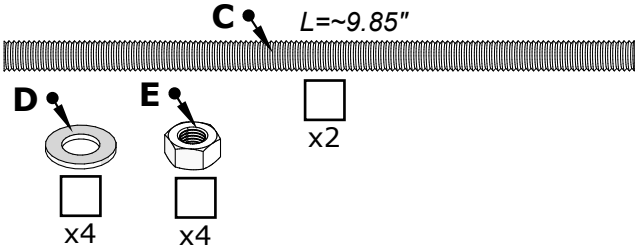

Article.
KI-USA-150-200

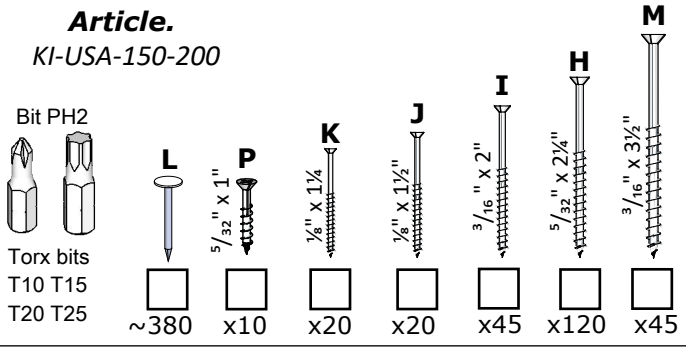

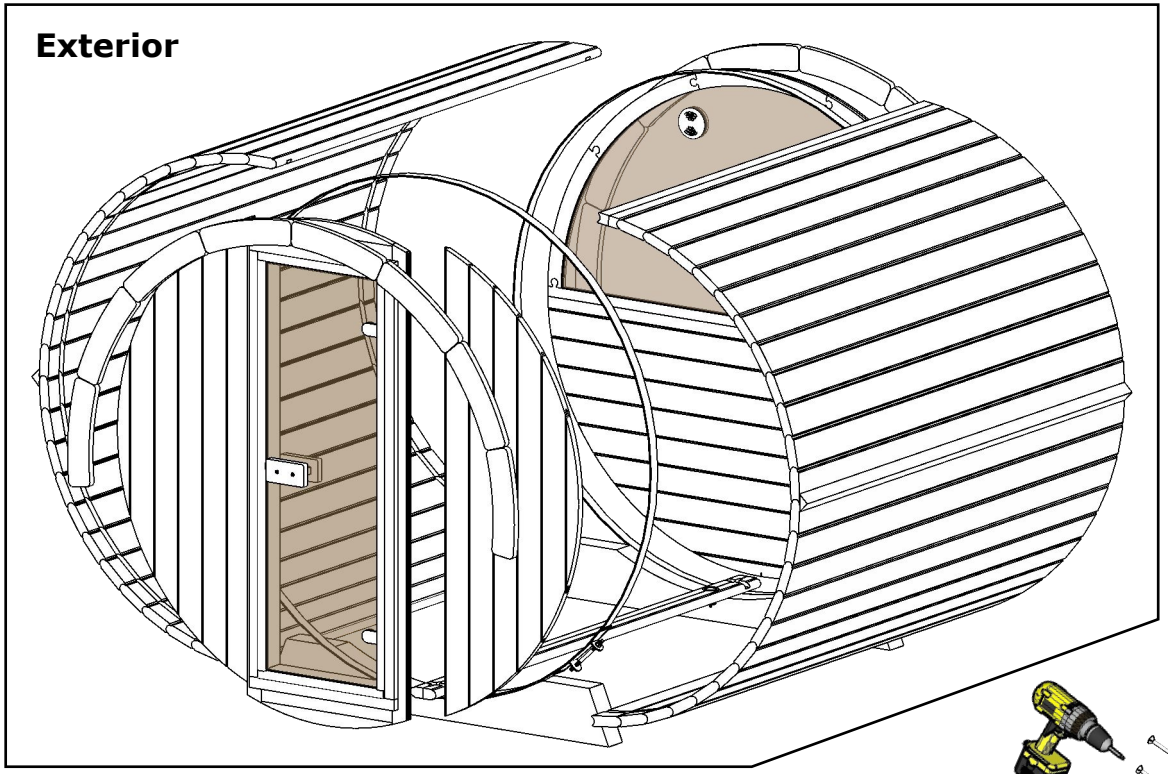
Exterior

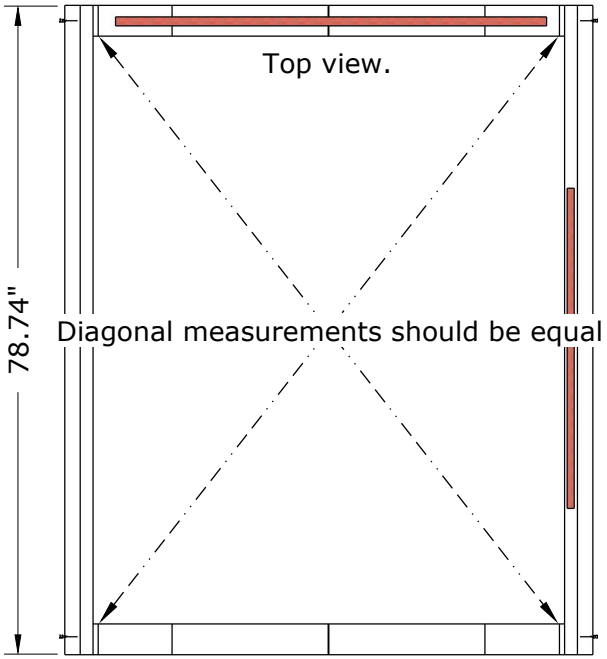
Top view.
78.74"
Diagonal measurements should be equal

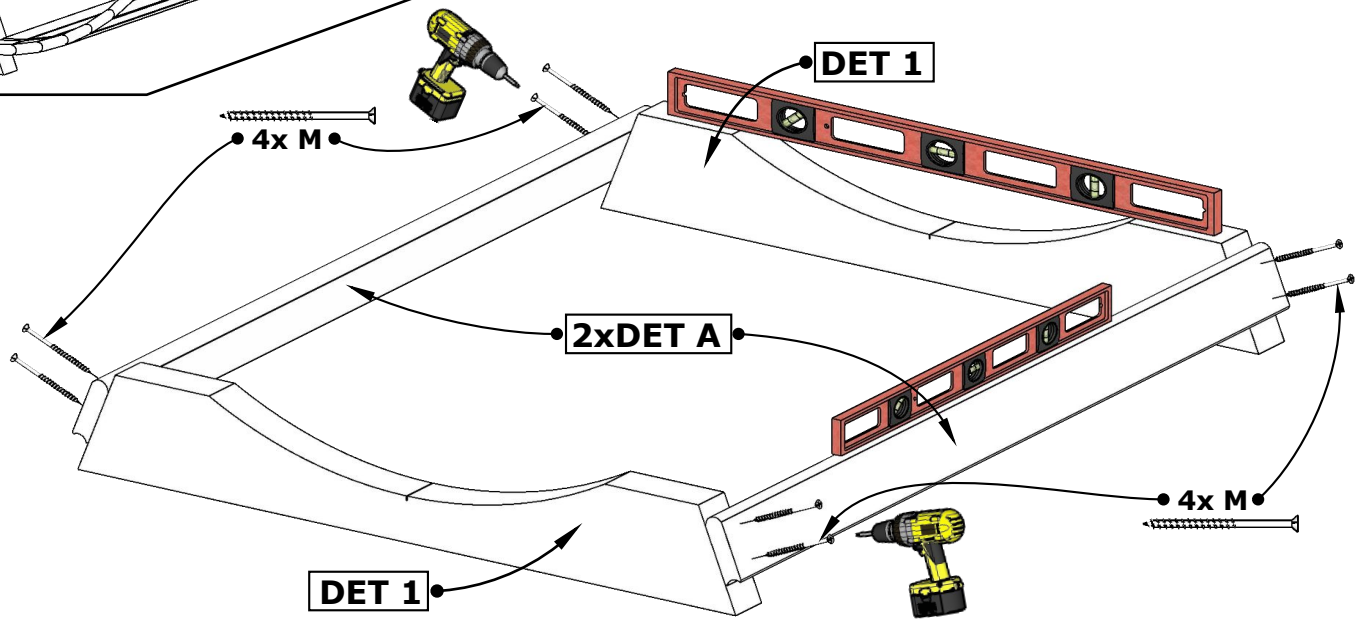
DET 1
4x M
2xDET A
4x M
DET 1

1.

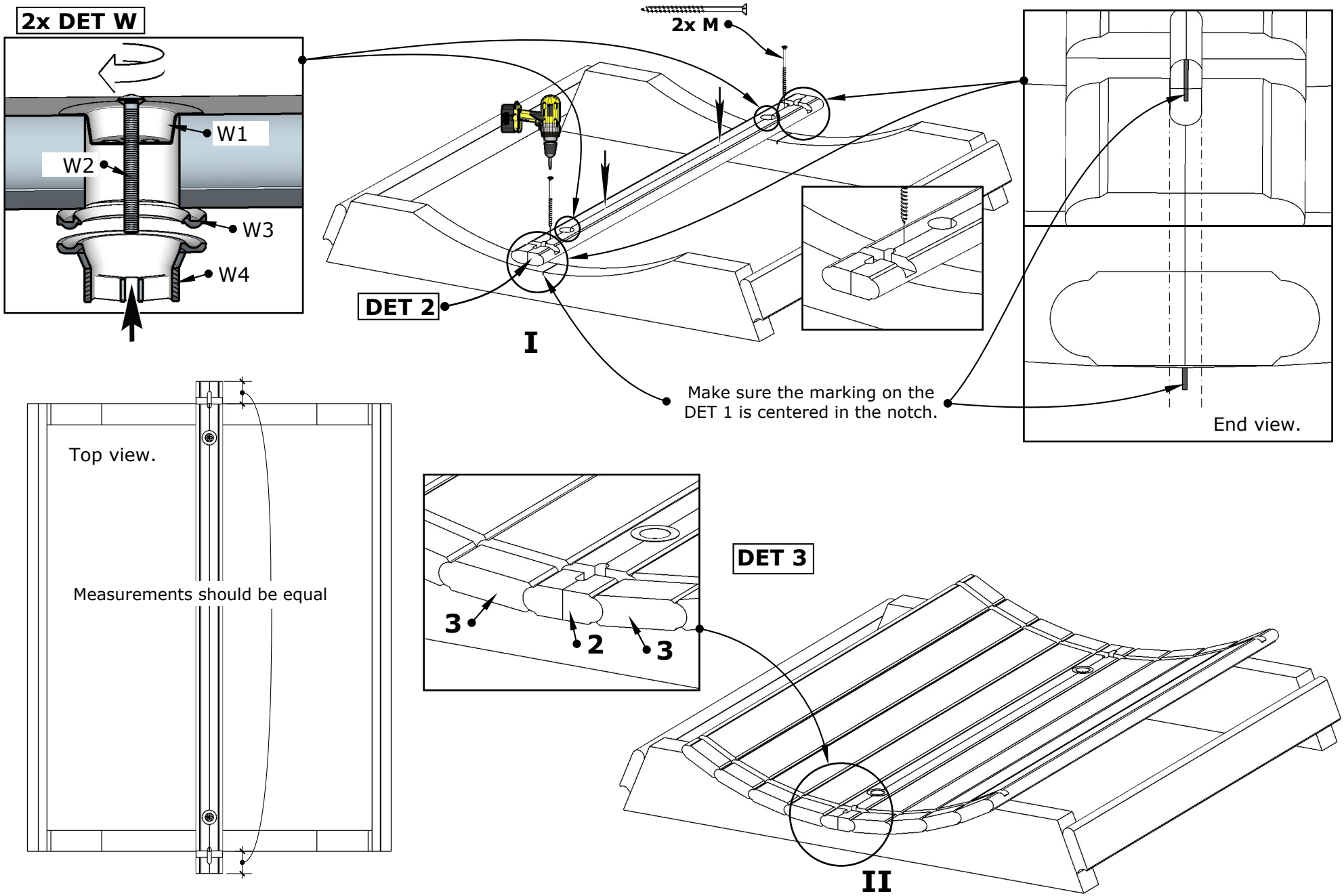
2x DET W
W1
W2
W3
W4
2x M
DET 2
I
Make sure the marking on the
DET 1 is centered in the notch.
End view.
Top view.
Measurements should be equal
DET 3
3
2
3
II

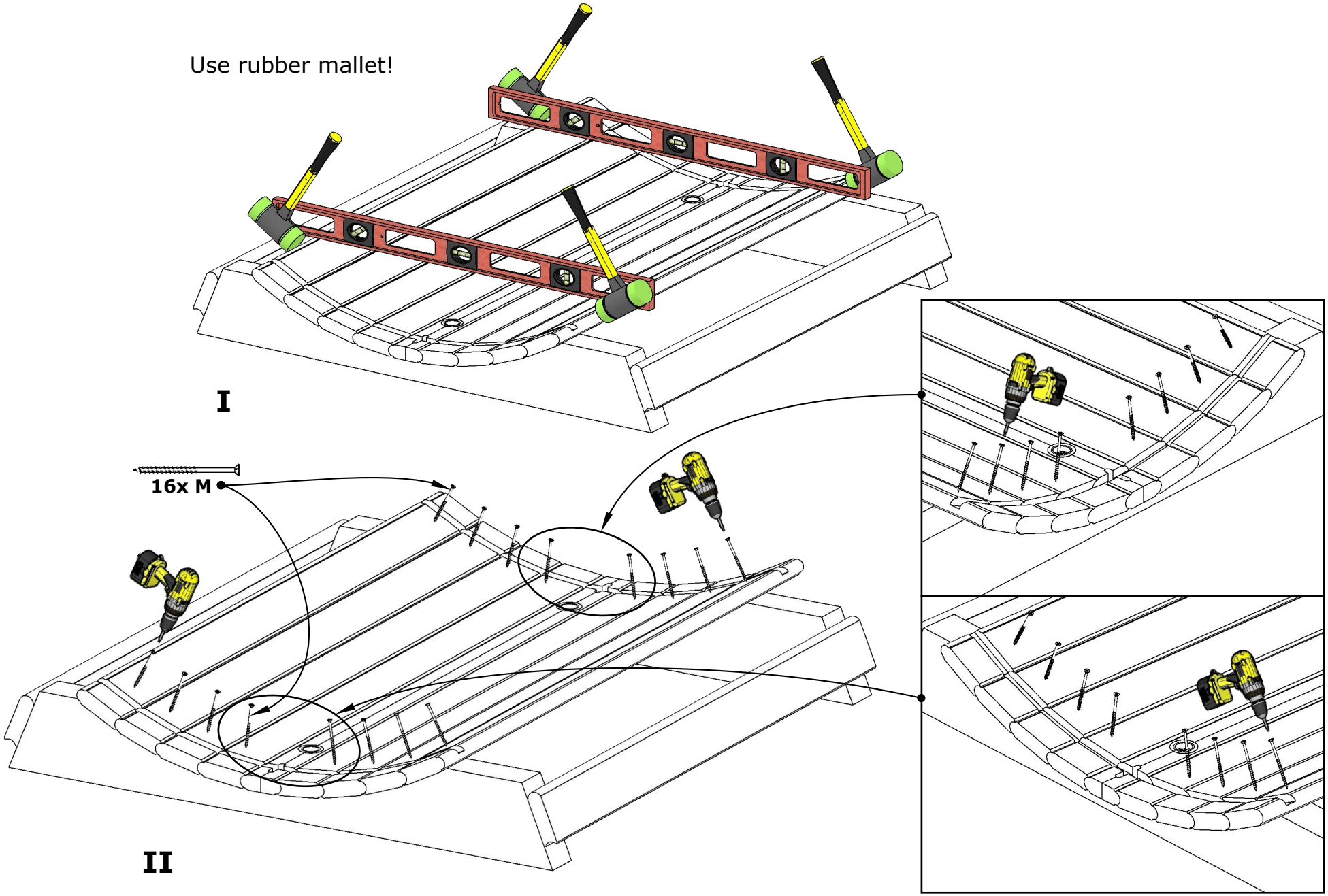

3.

Half-moon back wall assembly

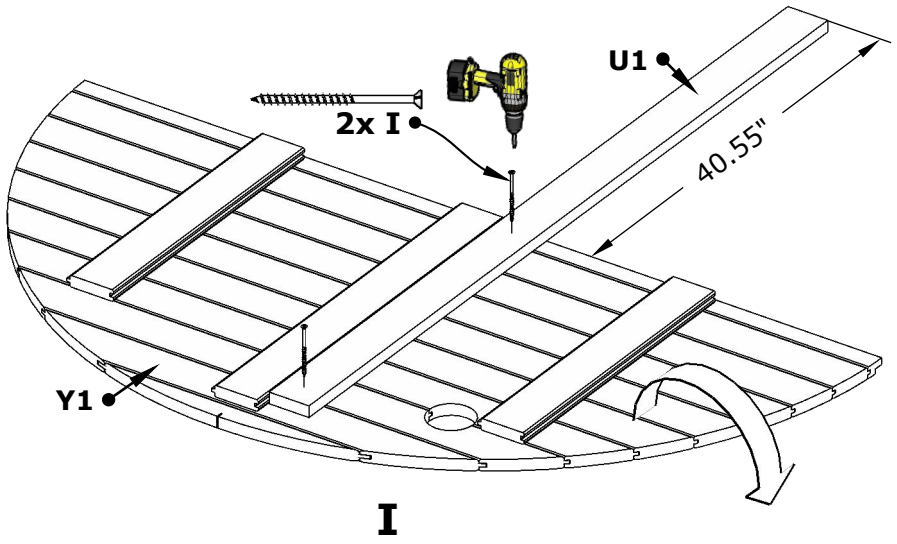

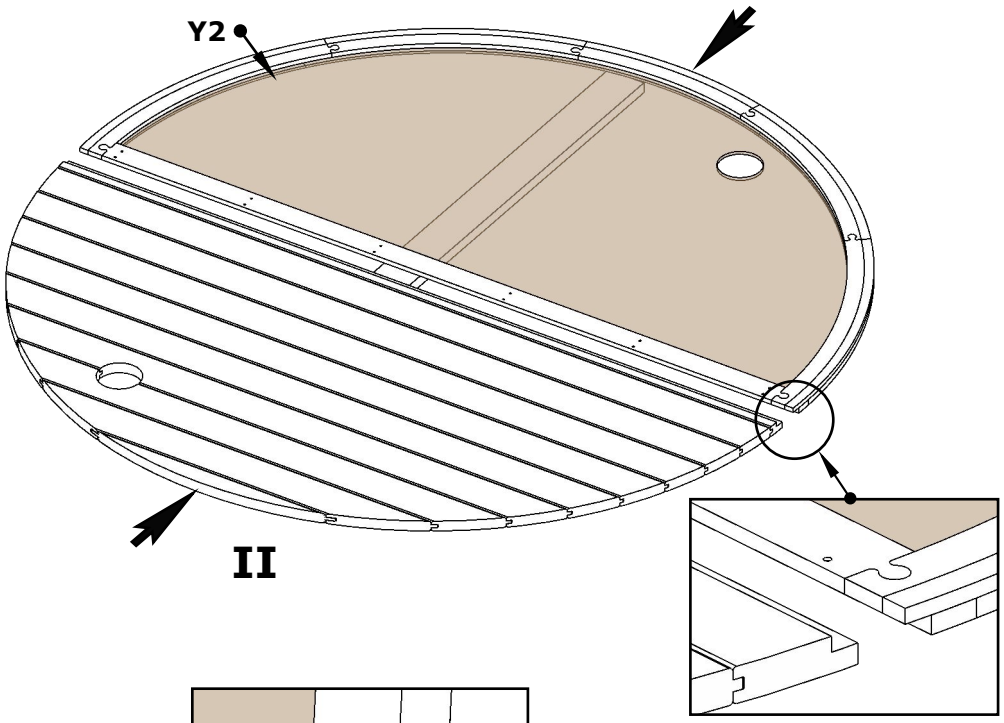

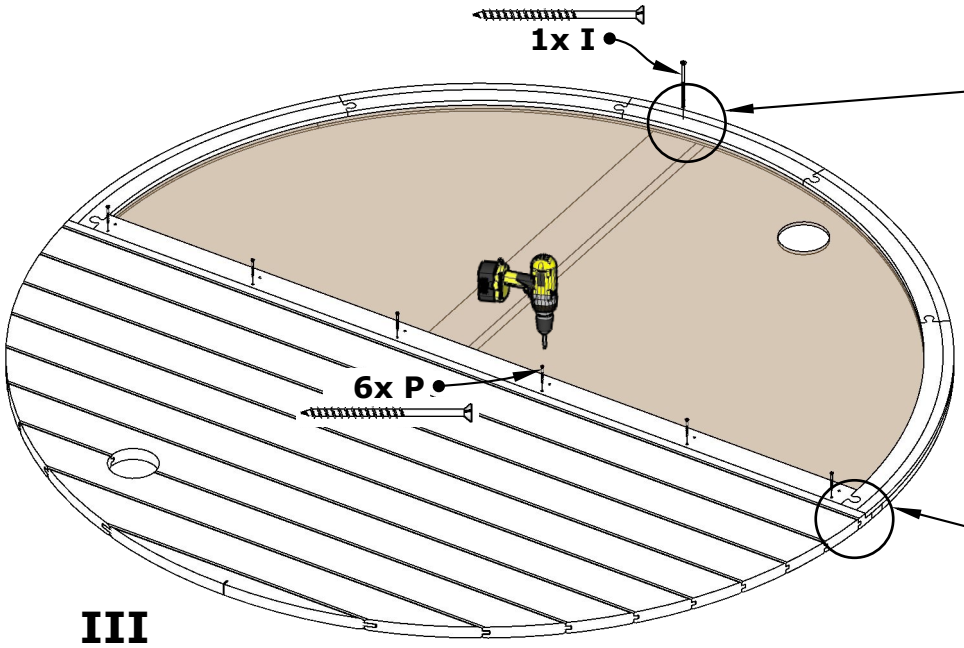

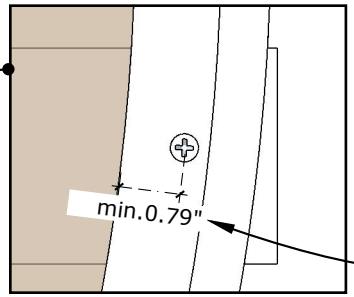

Attention! Be extra careful to not hit the glass!!!

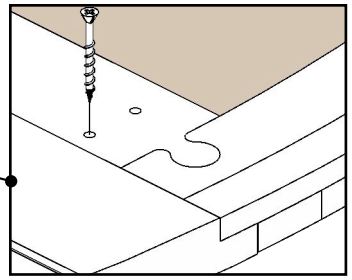

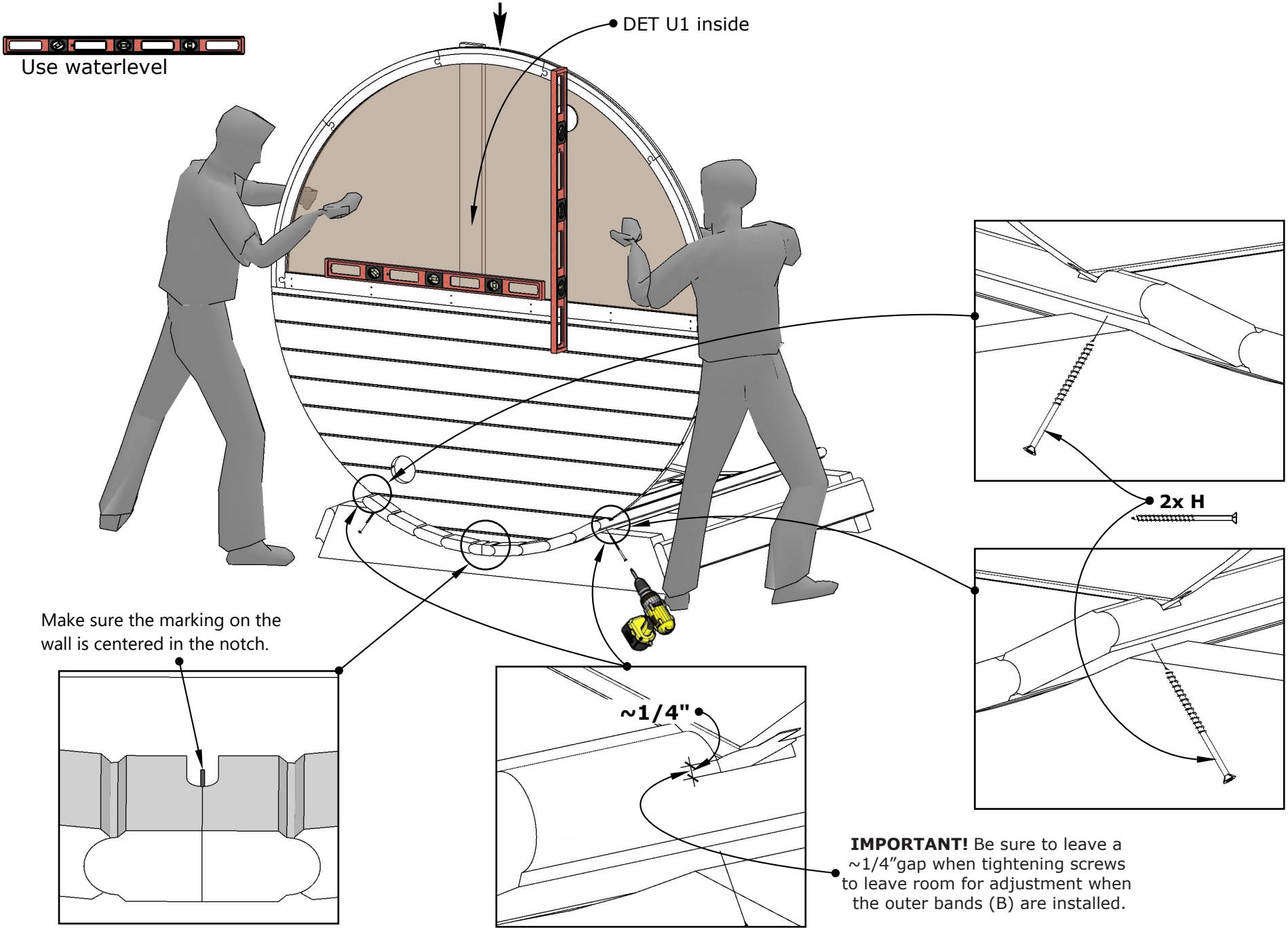

IMPORTANT! Be sure to leave a ~1/4”gap when tightening screws to leave room for adjustment when the outer bands (B) are installed.

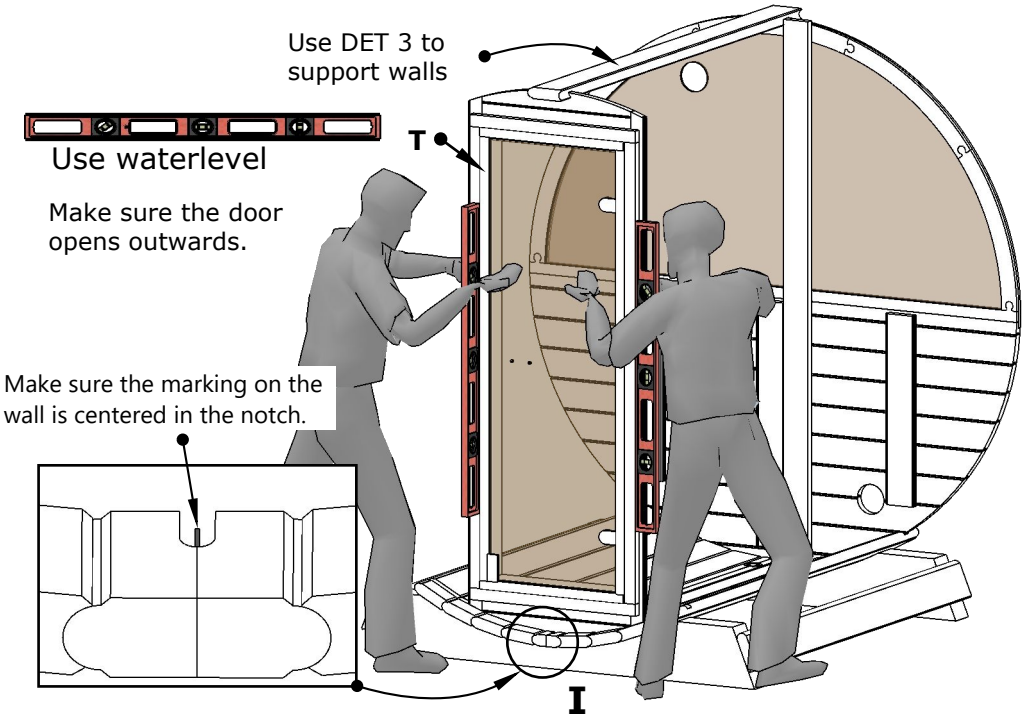
Use DET 3 to support walls
T
Use waterlevel
Make sure the door opens outwards.
Make sure the marking on the wall is centered in the notch.
I

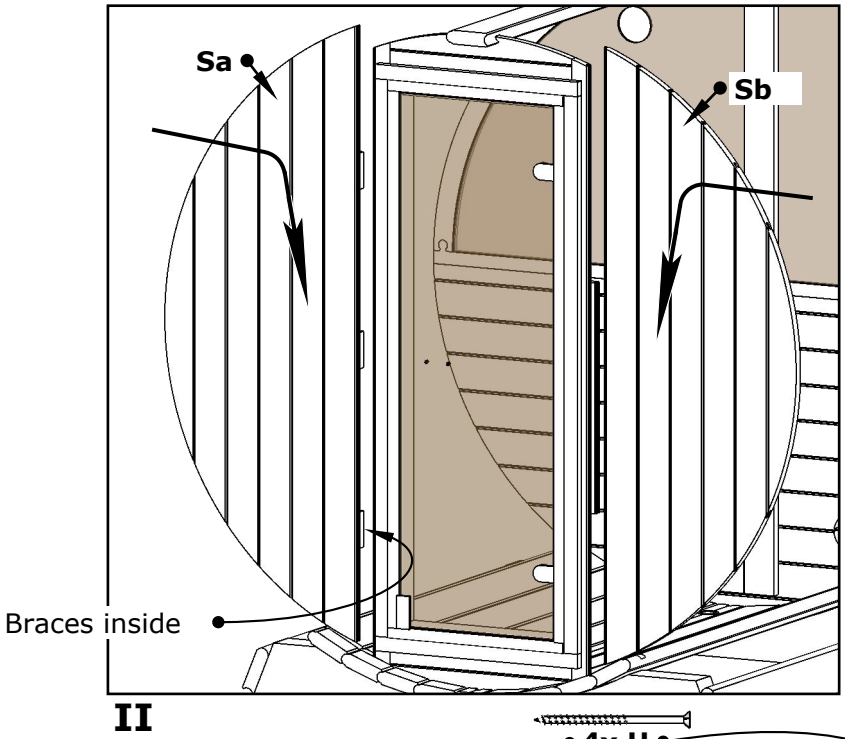
Sa
Sb
Braces inside
II

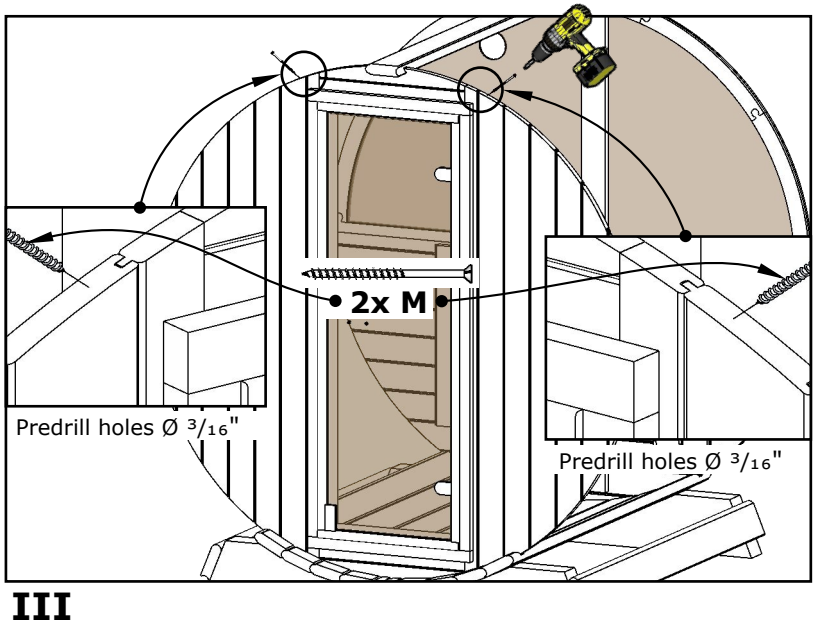
2x M
Predrill holes Ø 3/16"
Predrill holes Ø 3/16"
III

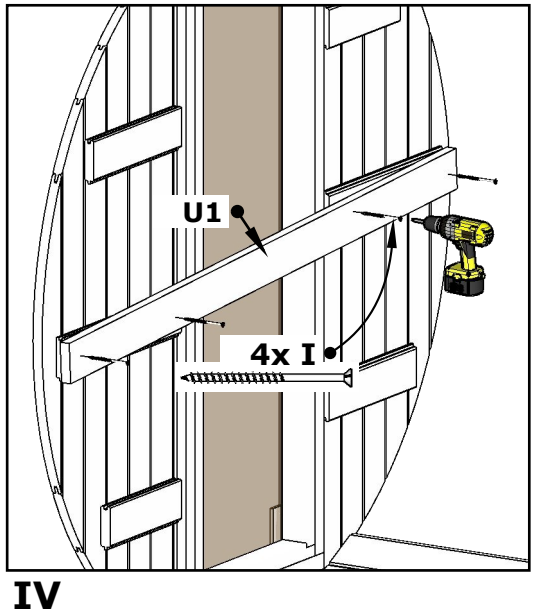
U1
4x I
IV

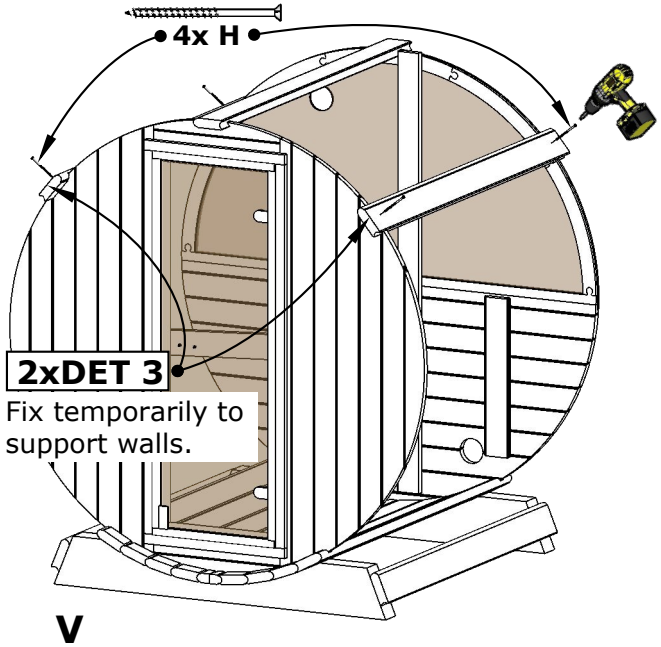
4x H
2xDET 3
Fix temporarily to support walls.
V

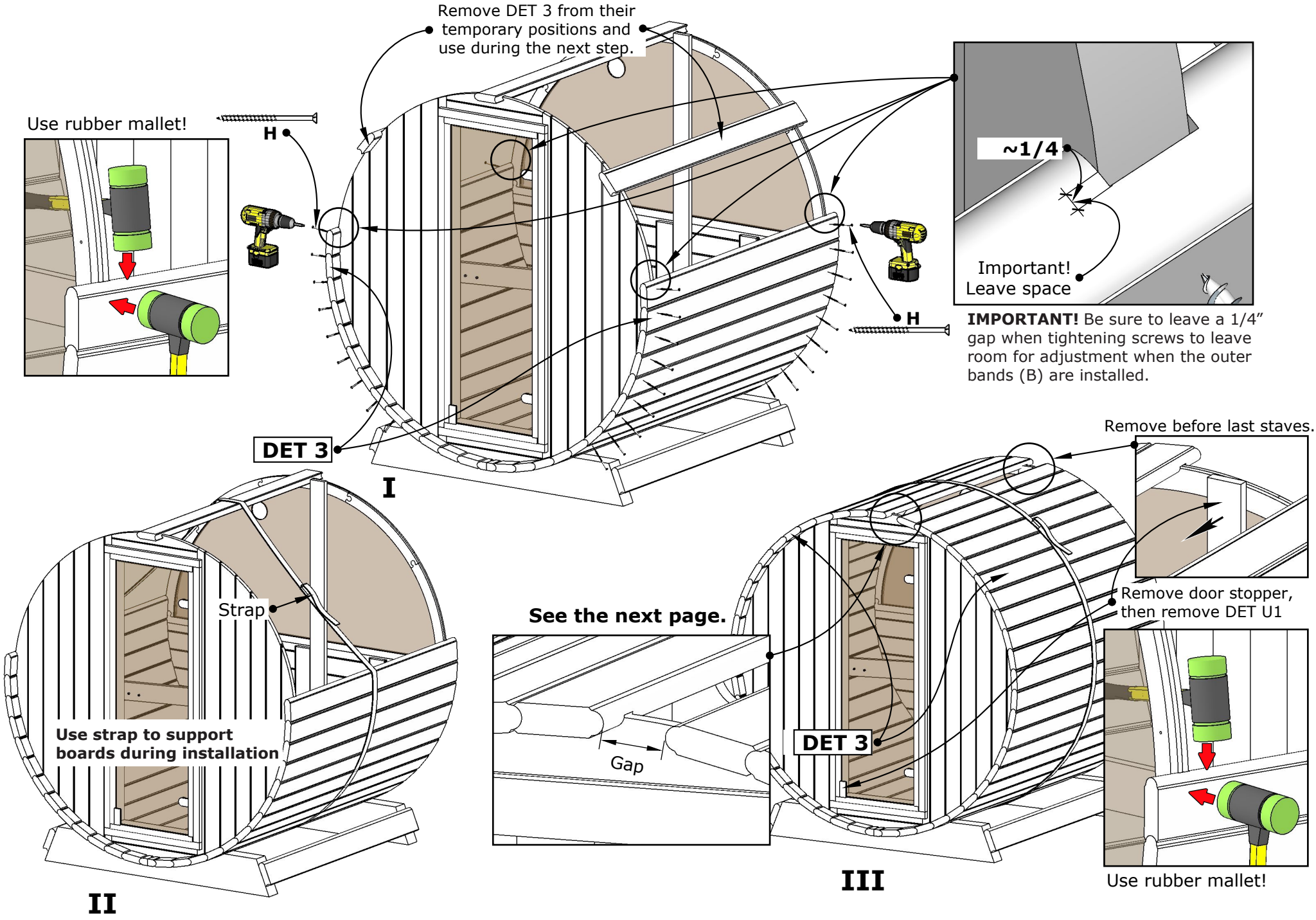
Remove DET 3 from their temporary positions and use during the next step.
Use rubber mallet!
H
H
DET 3
I
~1/4
Important! Leave space
IMPORTANT! Be sure to leave a 1/4" gap when tightening screws to leave room for adjustment when the outer bands (B) are installed.
Remove before last staves.
Remove door stopper, then remove DET U1
Strap
Use strap to support boards during installation
See the next page.
Gap
DET 3
Use rubber mallet!
II
III

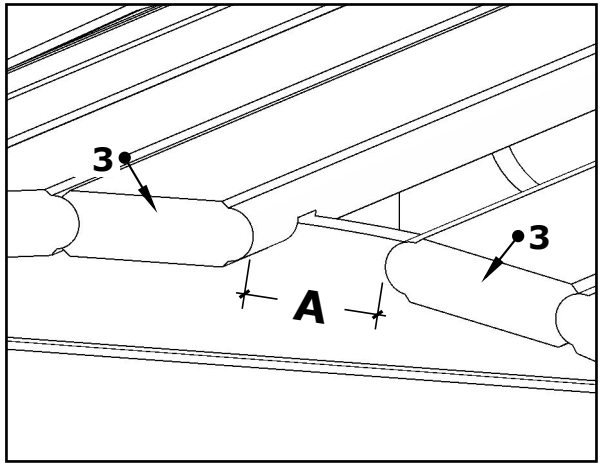

I

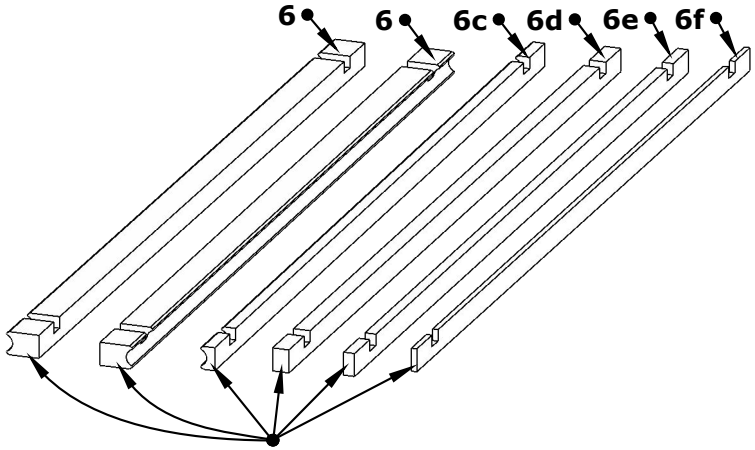

Join boards together (as shown in diagram III) that will bridge the width of the "A" gap. It is recommended that the combined boards are approximately 1/4" wider than the gap.

II

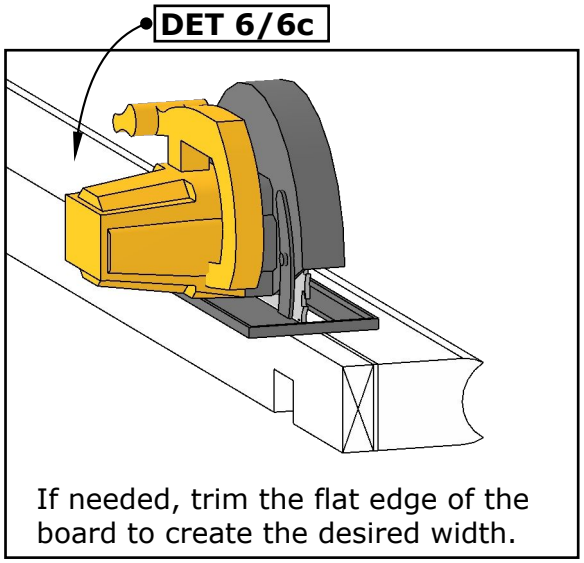

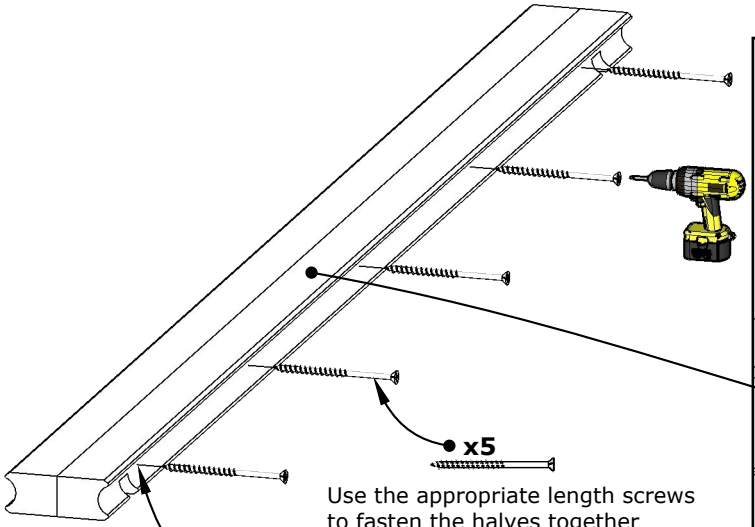

Use the appropriate length screws to fasten the halves together as shown in the diagram.

Pre-drill holes Ø5/32"

III

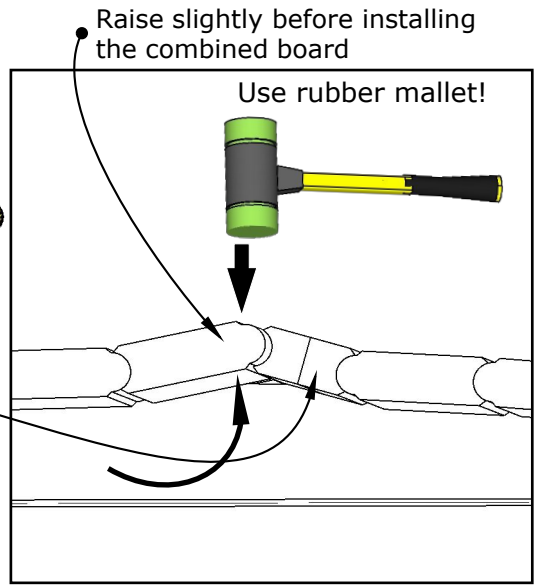

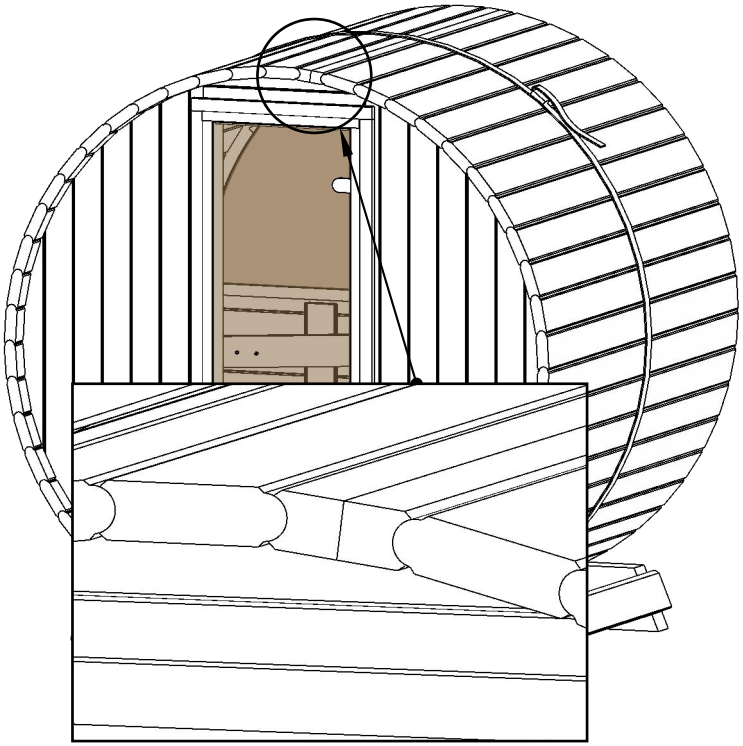

IV

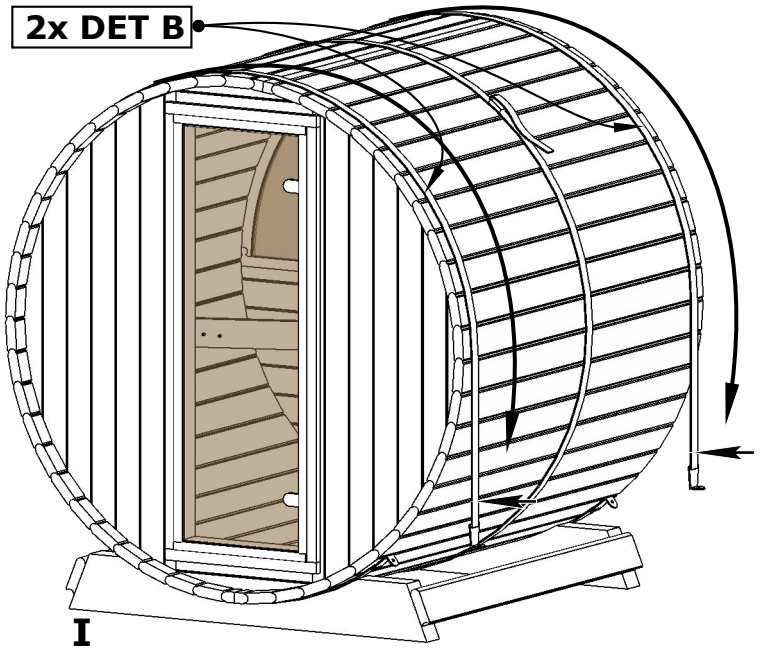
2x DET B
I

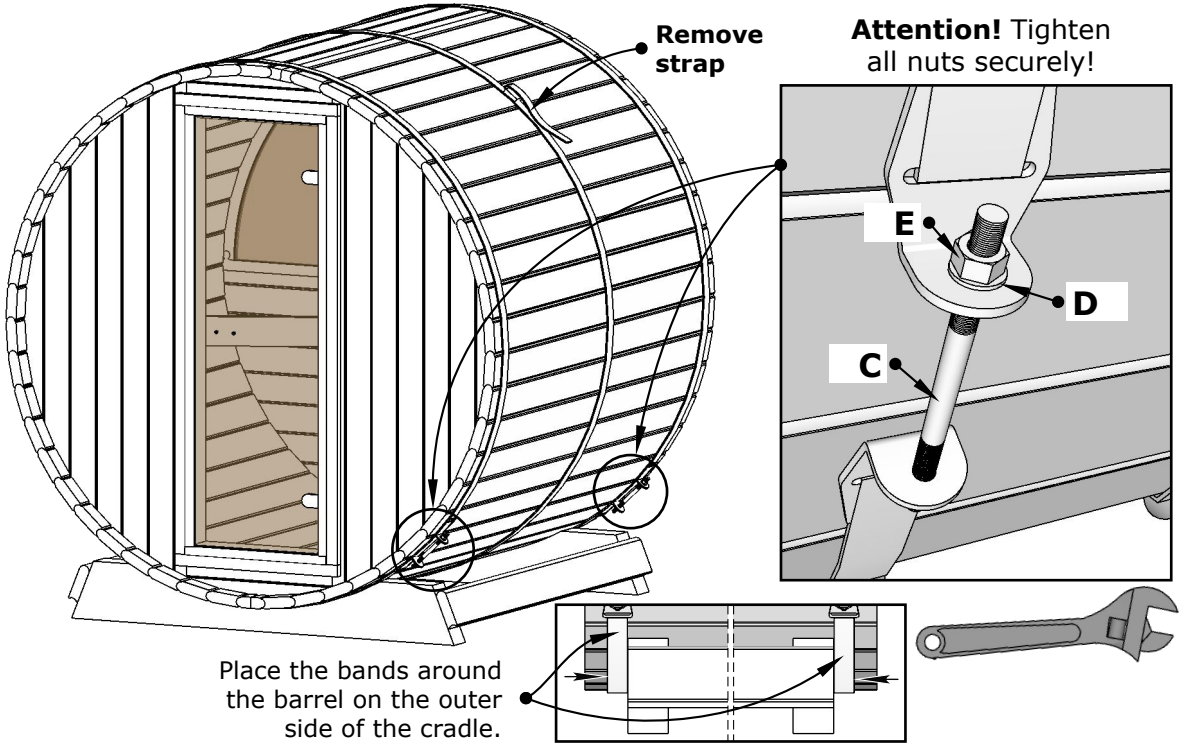
Remove strap
Attention! Tighten all nuts securely!
E
D
C
Place the bands around the barrel on the outer side of the cradle.

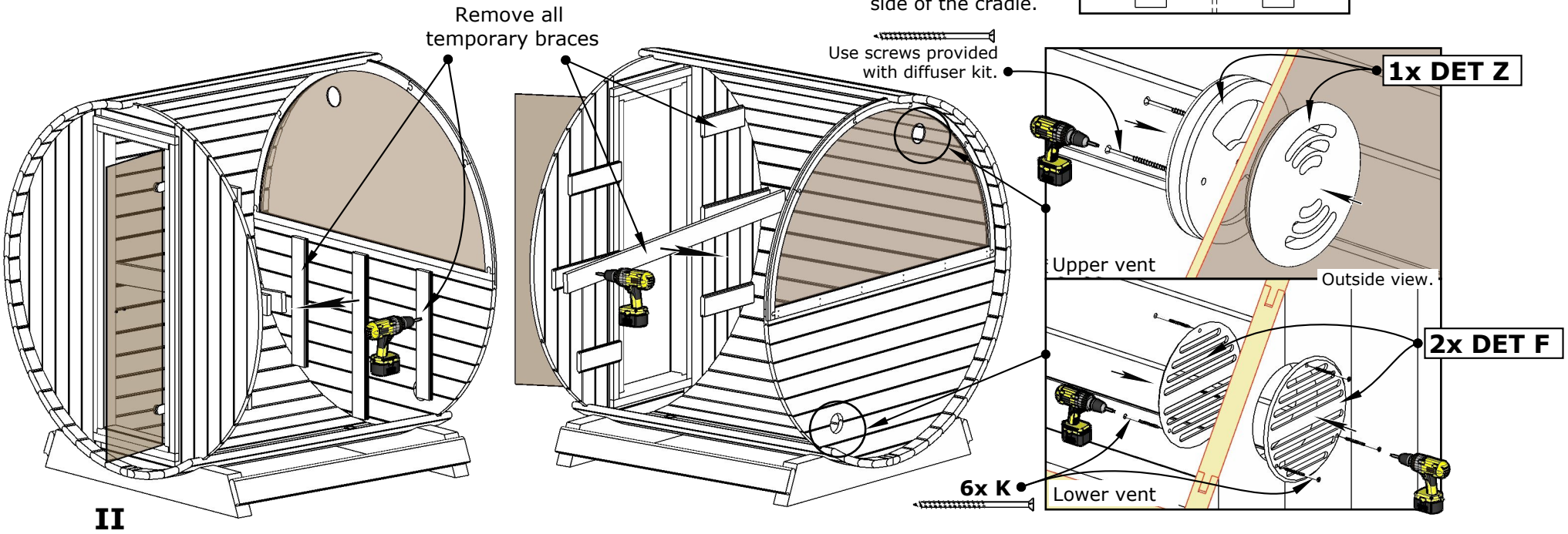
Remove all temporary braces
Use screws provided with diffuser kit.
1x DET Z
Upper vent
Outside view.
2x DET F
6x K
Lower vent
II

Interior

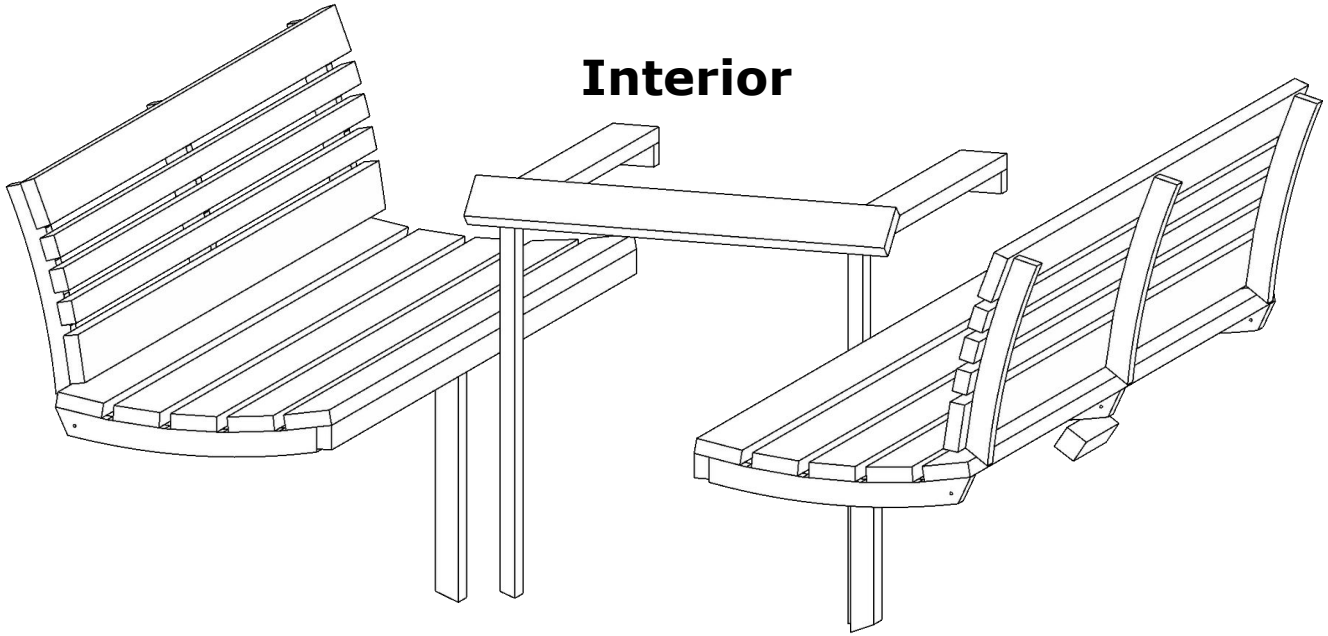

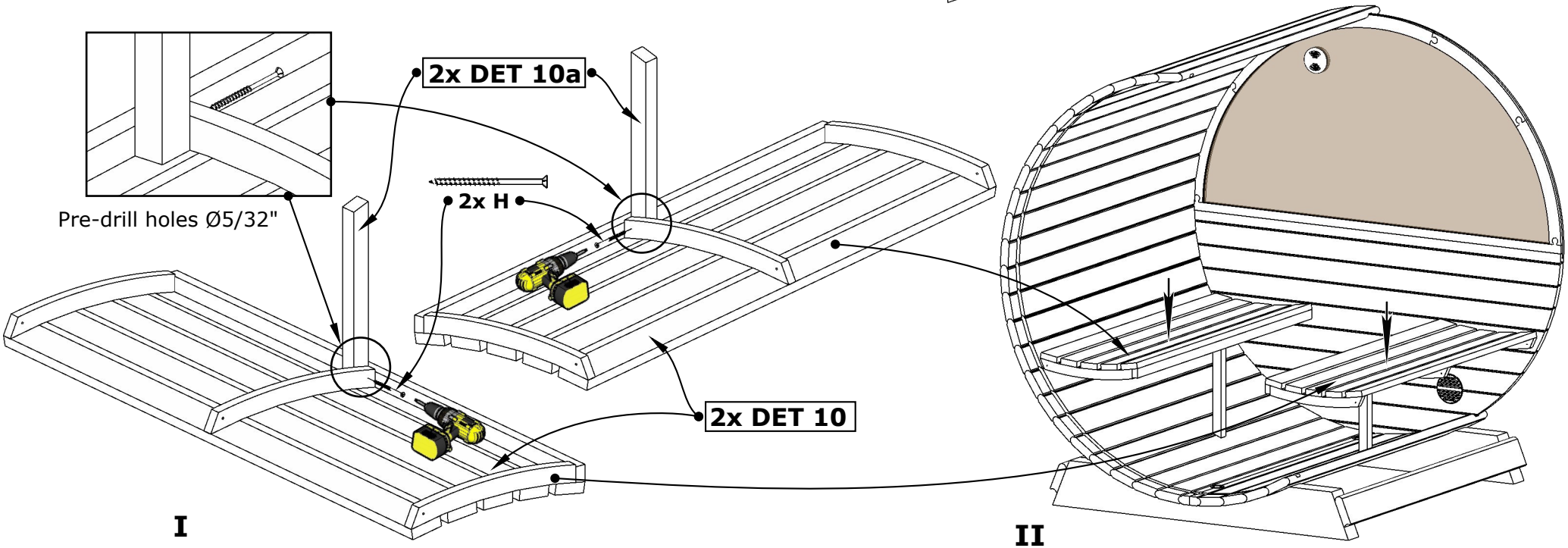

10.

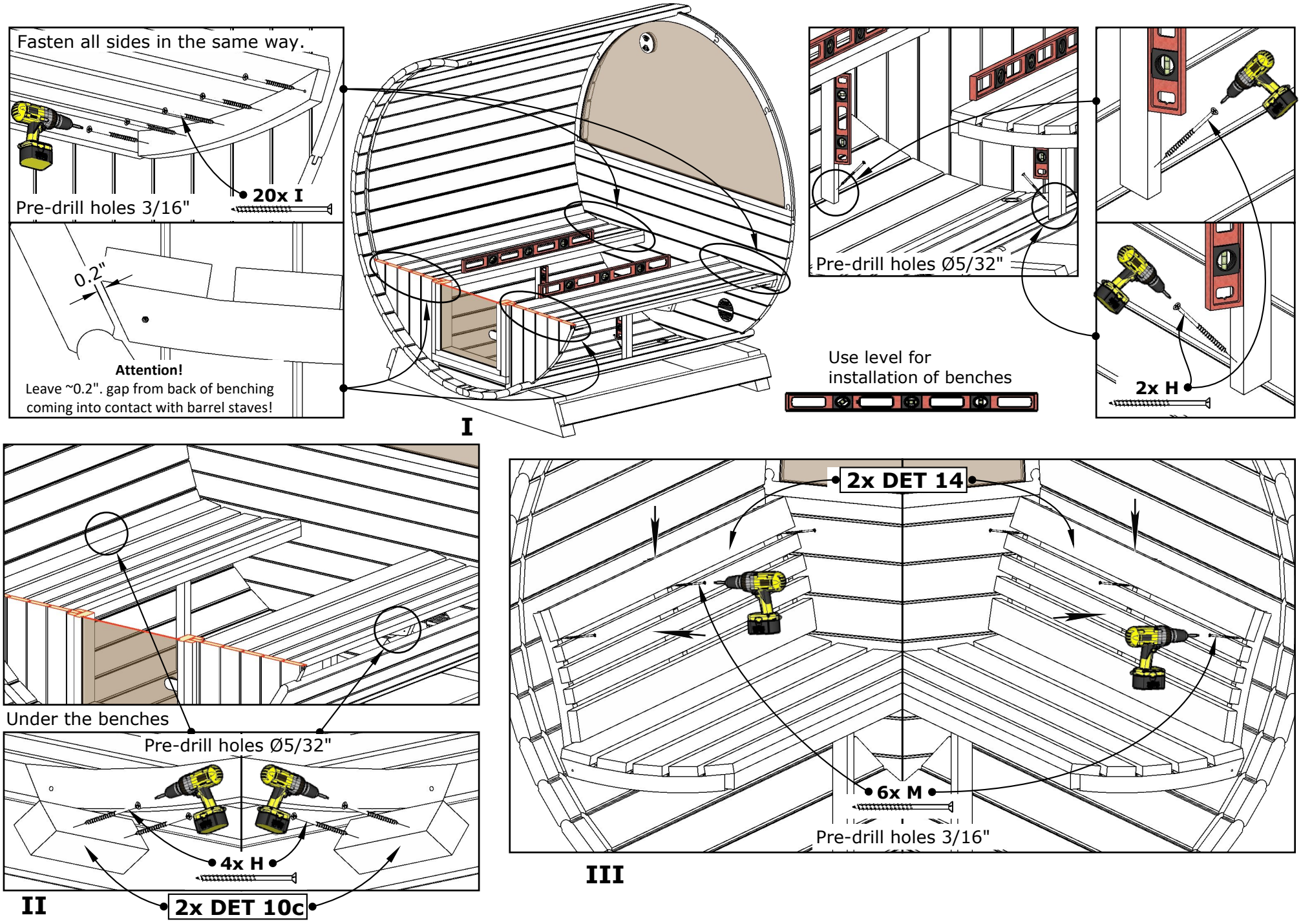
Fasten all sides in the same way.
Pre-drill holes 3/16"
20x I
0.2"
Attention!
Leave ~0.2". gap from back of benching coming into contact with barrel staves!
I
Pre-drill holes Ø5/32"
Use level for installation of benches
2x H
Under the benches
Pre-drill holes Ø5/32"
4x H
2x DET 10c
II
2x DET 14
6x M
Pre-drill holes 3/16"
III

ATTENTION!
HEATER GUARD MAY NOT MEET THE SAFETY DISTANCES OF ALL HEATERS AND SHOULD NOT BE USED IF THE HEATER DOES NOT FIT!

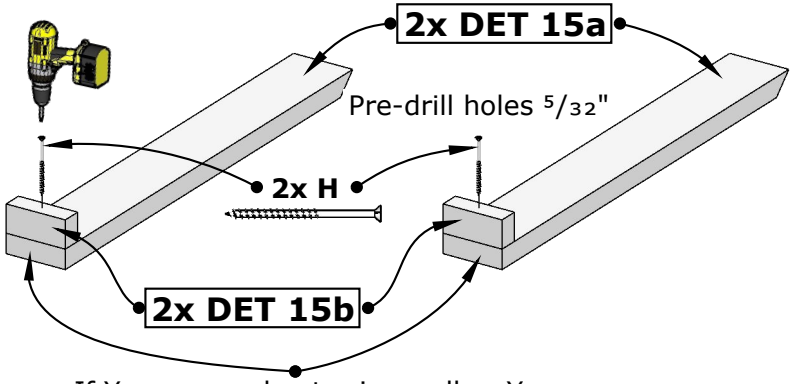

If Your sauna heater is smaller, You can cut DET 15a to lenght from the non-tapered end to better fit your heater.

I

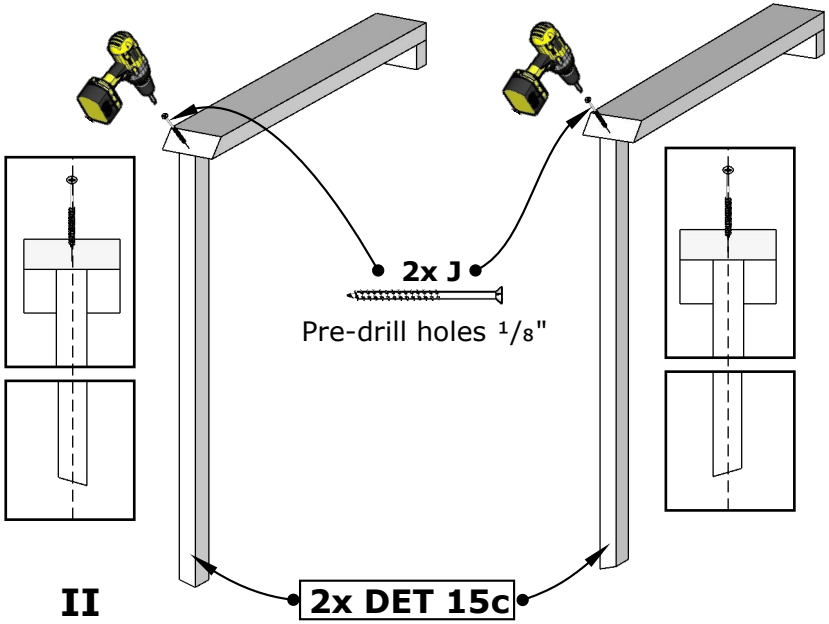

II

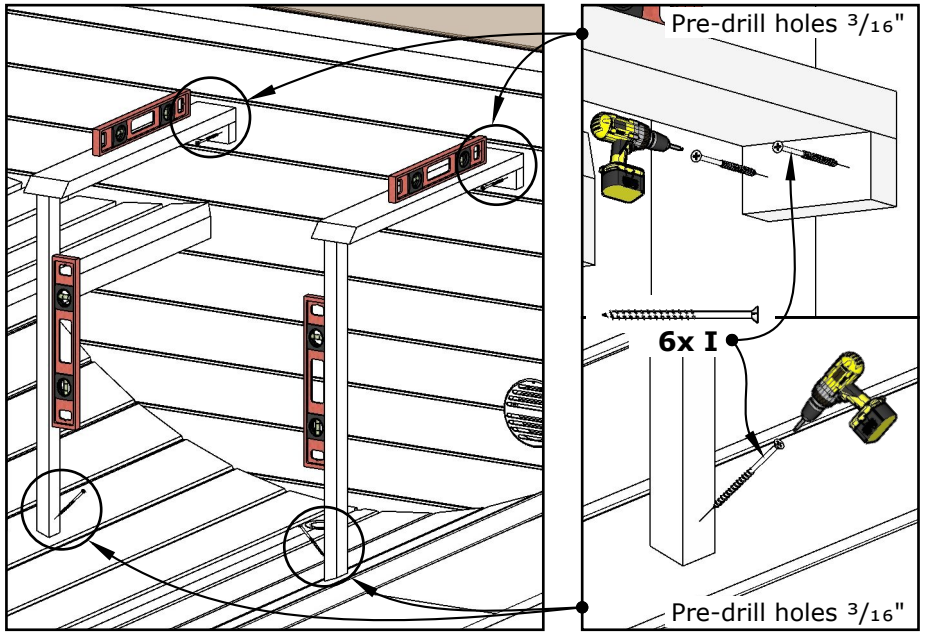

III

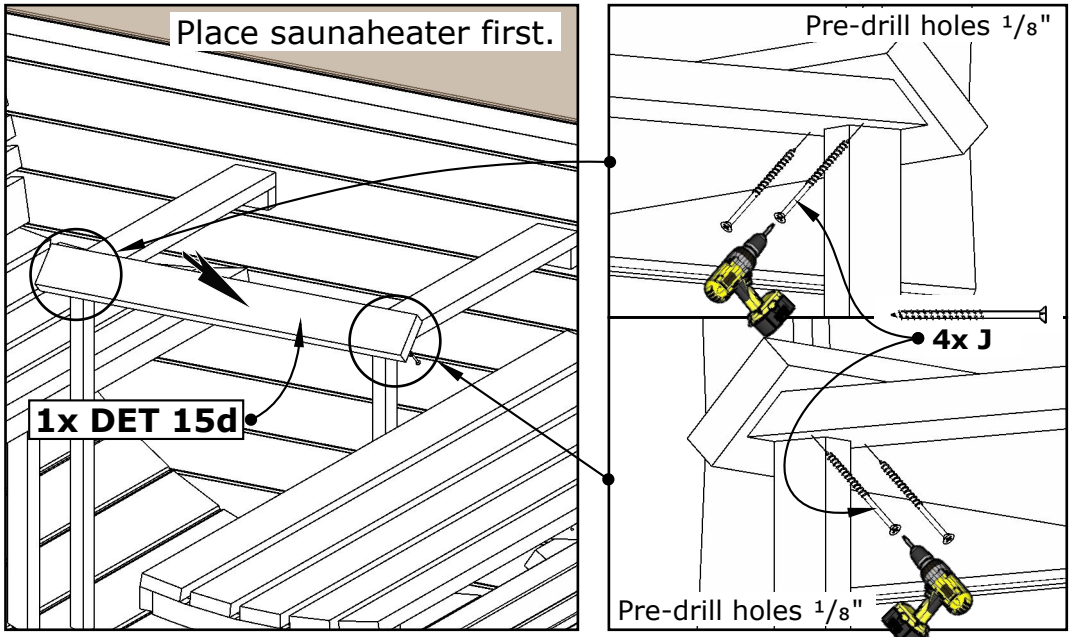

IV

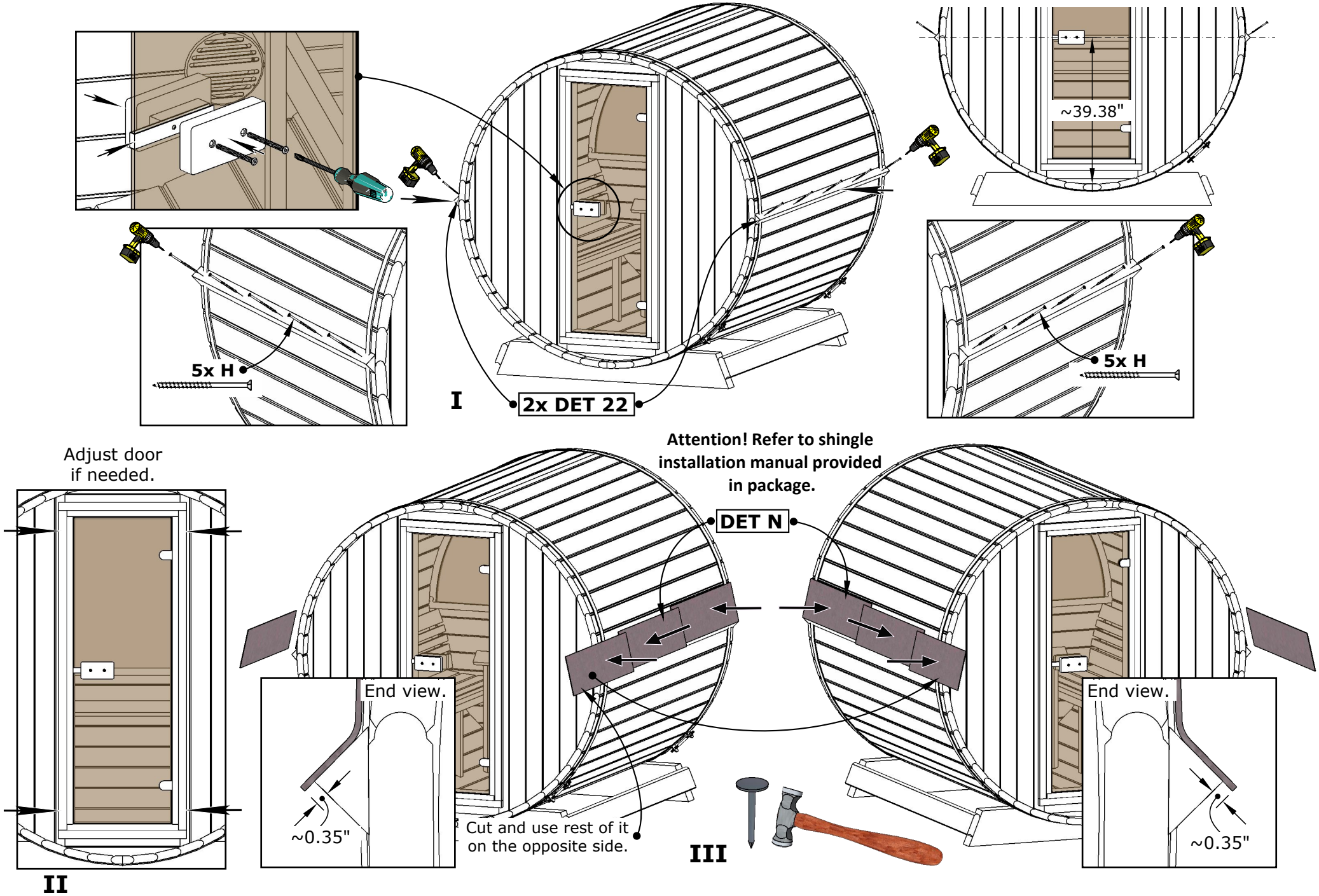
~39.38"
5x H
5x H
I
2x DET 22
Adjust door
if needed.
Attention! Refer to shingle
installation manual provided
in package.
DET N
End view.
~0.35"
Cut and use rest of it
on the opposite side.
End view.
~0.35"
II
III

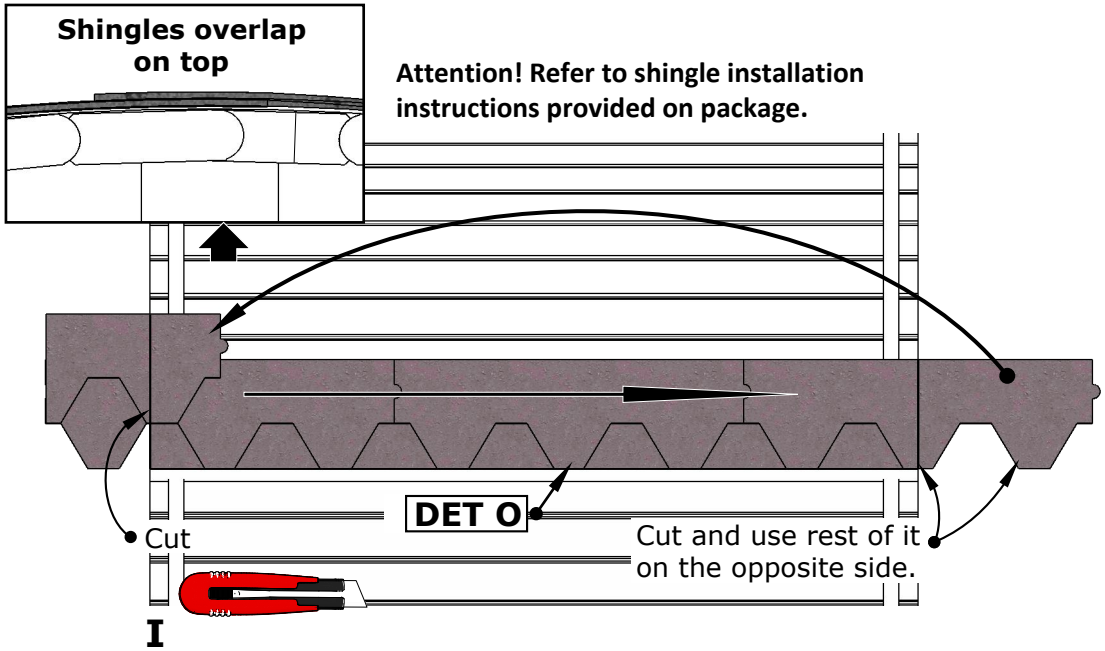
Shingles overlap on top
Attention! Refer to shingle installation instructions provided on package.
DET O
Cut
Cut and use rest of it on the opposite side.
I

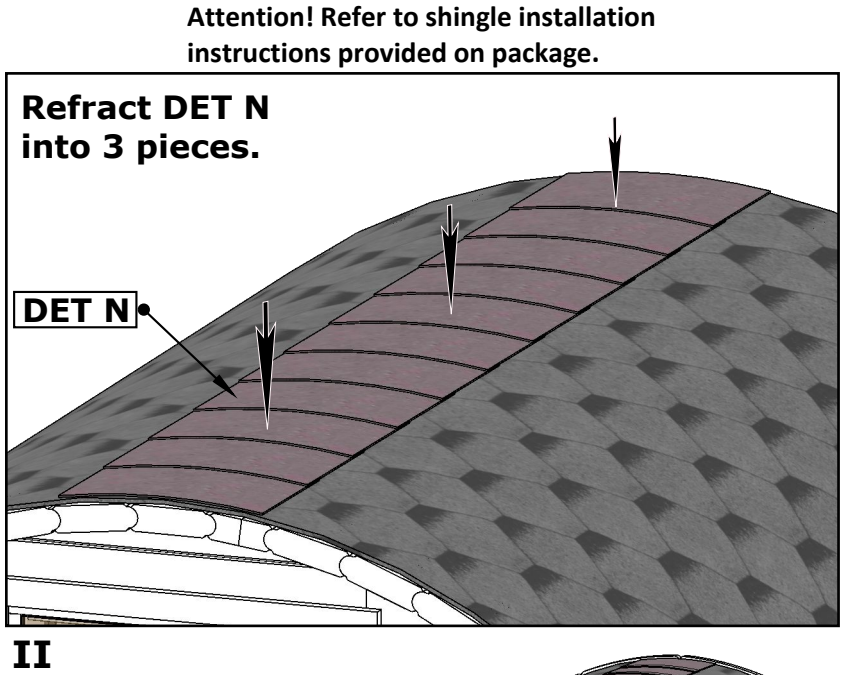
Attention! Refer to shingle installation instructions provided on package.
Refract DET N into 3 pieces.
DET N
II

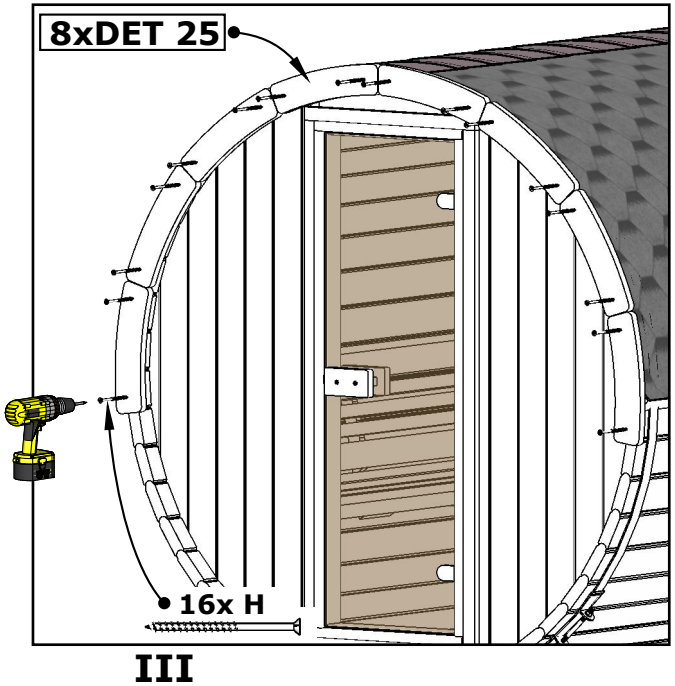
8xDET 25
16x H
III

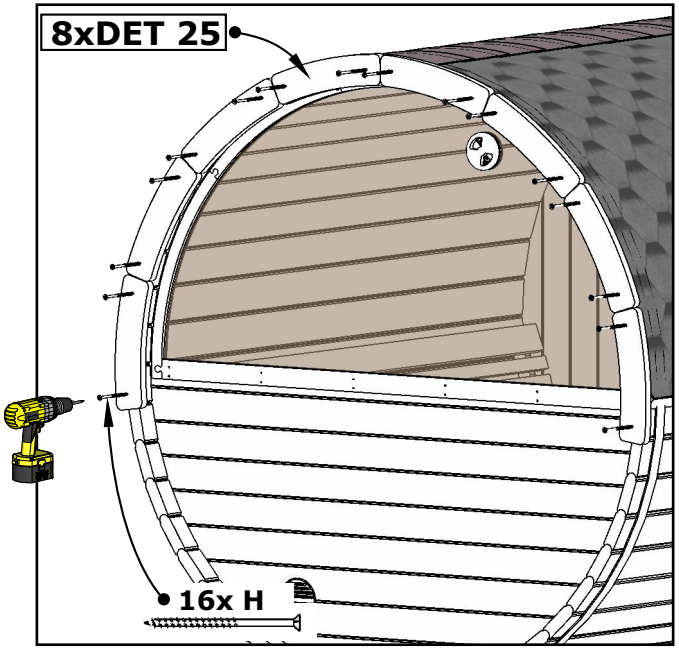
8xDET 25
16x H

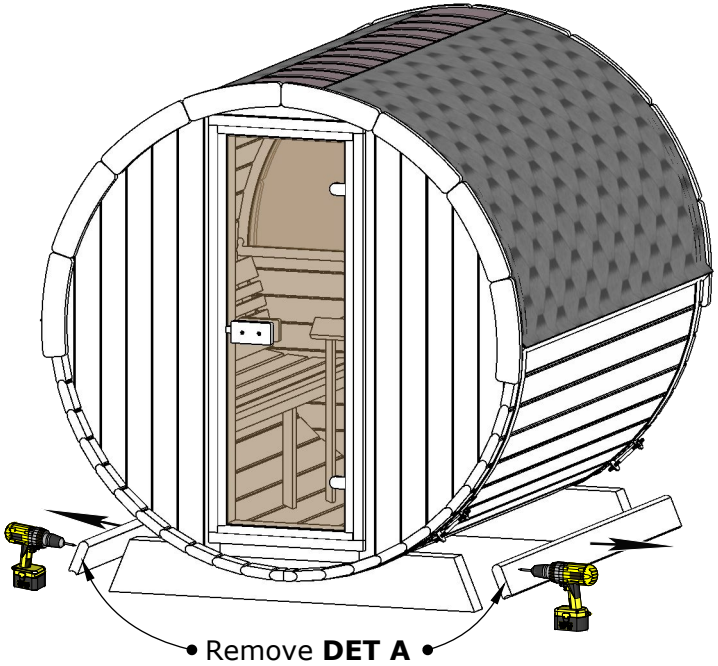
Remove DET A

Installation Instructions

When building a wooden product, it is important to follow all installation instructions to ensure the quality and durability is guaranteed.

Important!

Identification number of the Product / **Serial Number:** **123456789**

Must be accompanied by the serial number to identify the product.

General Installation

- **Careful handling:** Treat all wooden parts with care during assembly to avoid scratches or friction.
- **Level foundation:** Ensure the sauna sits on a stable, level foundation for proper door and window operation. Ensure the base has enough stability to support the sauna.
- **Proper drainage:** Avoid constant water exposure to wooden materials.
- **Electrical and plumbing:** Hire qualified professionals for electrical work, including heater and lighting installation.
- **Wood treatment:** To ensure optimal performance and longevity of your Sauna, proper wood treatment is crucial. We strongly recommend treating all wooden components with a wood preservative. This includes unfinished skirting boards, if applicable, which should be treated immediately upon assembly.

Door and Window Maintenance

- **Regular checks:** Regularly inspect window and door hinges and locks. Tighten loose components and lubricate as needed.

- **DOOR ADJUSTMENT INSTRUCTIONS**

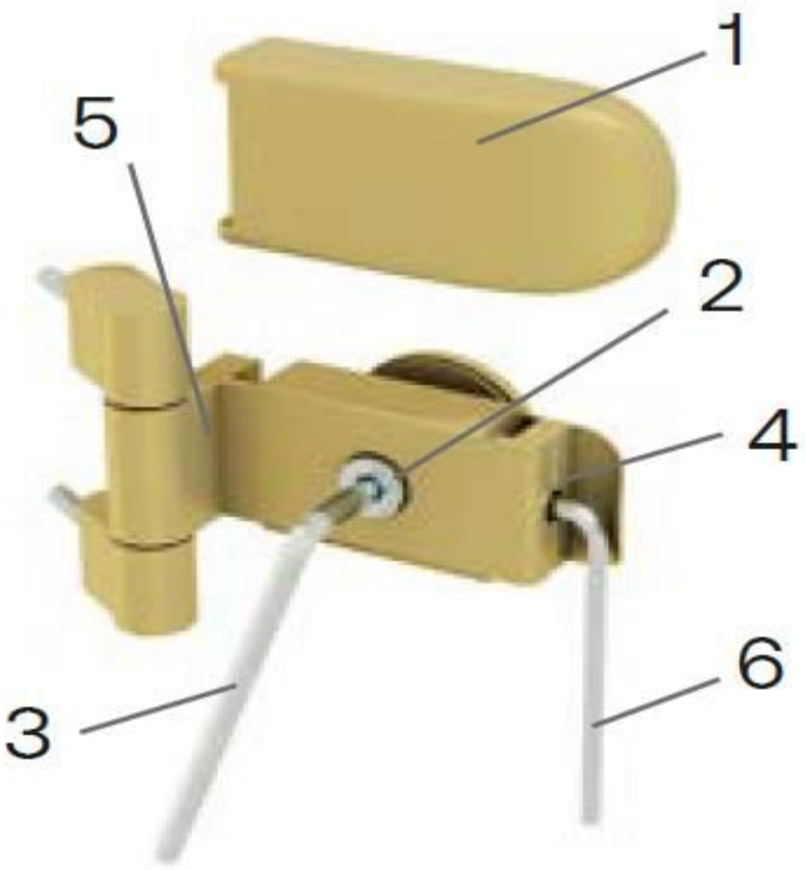

- You will need 3-mm (6) and 5-mm (3) hexagon keys for adjusting the hinges. Remove the plastic covers from the hinges (1). Loosen the fixing screws (2) one turn (do not remove the glass). If needed, the door can be shimmed up a bit from here vertically. If it needs to be adjusted left or right, turn the screws (4 & 5) as required. If one screw is turned counterclockwise, the other must be turned clockwise. Make sure both screws are tight when you have completed this step. Then tighten the fixing screws (2) when adjusted.

Wood Protection and Maintenance

- **Protective coating:** Apply a wood preservative at least once a year (or more often) to improve resistance to dirt and moisture, make cleaning easier, and extend the lifespan of the product.
- **Adjusting wick condition:** Check and adjust the condition of the sauna's wicks (if applicable) a few times a year.

Sauna Heater and Stones

- **Heater and chimney installation:** Follow the manufacturer's instructions for heater and chimney installation.
- **Cleaning heater stones:** Wash new stones before placement to remove dust and chemicals.
- **Stone placement:** Arrange stones according to the manufacturer's instructions, ensuring heating elements are not exposed.
- **First heating:** The first heating must take place under supervision for two-hours to a temperature of about 210°F. The sauna must be well ventilated both during and after heating. This allows the wood to absorb finishing materials and form a protective layer.

Sauna Use

- **Firewood:** Use dry firewood up to 12” long for wood-burning heaters.
- **Water Throwing:** Throw water only on the heater, not on walls or benches.
- **Swimwear:** Avoid wearing swimwear in the sauna to prevent damage to the benches from dripping water.
- **Seating comfort:** Consider using seating pads for increased comfort on hot benches.
- **Cracked stones:** Check the heater stones regularly, as they can crack over time. Replace or add stones as needed.

Sauna Cleaning After Each Use

- **Wipe down benches:** Use a clean, damp cloth to wipe down the benches. Do not use running water to clean the bench or other wooden surfaces.
- **Cleaning products:** Use suitable cleaning products specifically designed for sauna benches and other wooden parts.
- **Drying and ventilation:** After cleaning, allow surfaces to dry completely and ensure proper ventilation. Run the heater for at least 30 minutes with the vent open and door/windows closed.

Sauna Maintenance - Yearly

- **Wood treatment:** Re-treat wooden surfaces with a suitable product, especially for frequently used saunas.
- **Cleaning surfaces:** Clean all surfaces with a soft brush/cloth and a designated cleaning agent according to the product's instructions.
- **Heavy stains:** For stubborn stains, lightly sand the area before re-treating with wood preservative.

- **Avoid unsuitable products:** Avoid paints, varnishes, harsh disinfectants, or pressure washers, as these can damage the wood.
- **Hardware checks:** Inspect bench and support mountings. Tighten loose screws if necessary, as wood can loosen due to heat and moisture fluctuations.

What to Avoid in Your Sauna

- **Drying textiles:** Avoid drying textiles in the sauna due to fire hazards and potential wood damage from excessive moisture.
- **Excessive heat:** Don't exceed the maximum temperature specified by the heater manufacturer to prevent fire hazards and wood warping.
- **Cleaning methods:** Avoid using pressure washers or excessive running water, as this can permanently damage the wood structure.

Wood Characteristics in Saunas

- **Natural changes:** Wood is a natural material that may crack or warp slightly due to temperature fluctuations. This is normal in saunas with extreme temperature and humidity changes.
- **Deformation factors:** The risk of wood deformation depends on the material, usage intensity, and is more noticeable with wider boards.
- **Darkening wood:** Wood in areas exposed to hot steam may darken over time.
- **Wood Smell:** Thermally treated wood has a characteristic smell that diminishes over time but does not completely disappear. In a sauna, the smell weakens faster if it is heated for a long time and aired at the same time. The smell is softened by treating the wood with a suitable wood oil or wood care product. Do not wash untreated thermal wood with water, as this will make the smell stronger.

Technical Support
(224) 253-5909