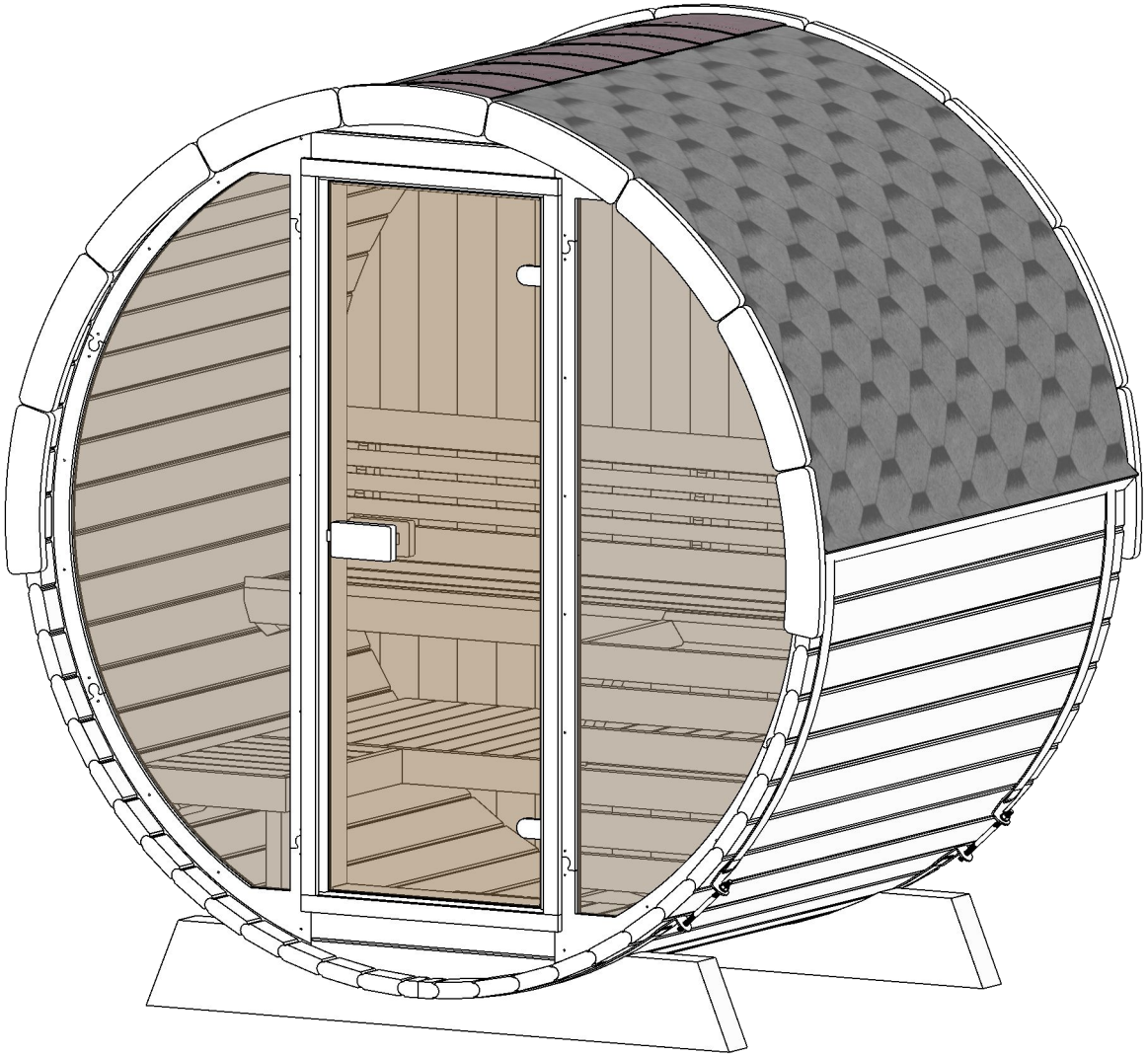

Note: Please read manual before construction.

Tools needed

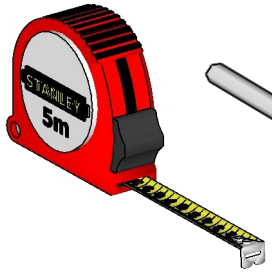

Measuring tape

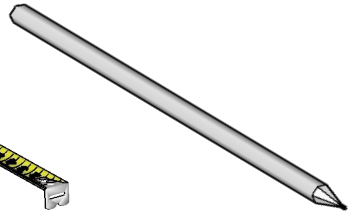

Marker pen

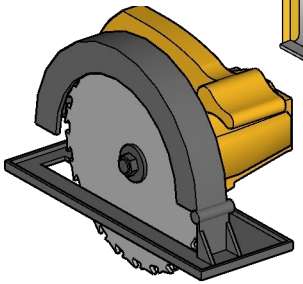

Circular saw

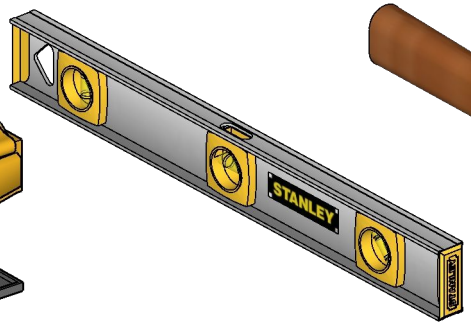

Water level

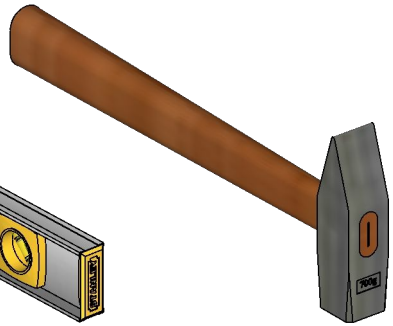

Hammer

Extra hands

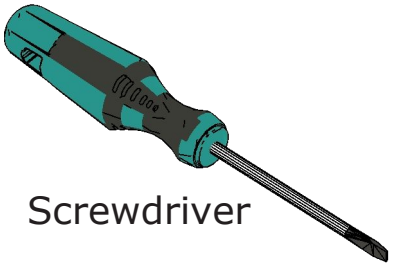

Screwdriver

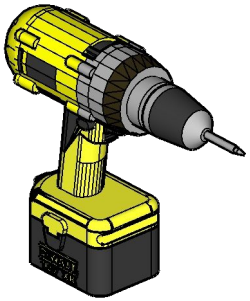

Drill

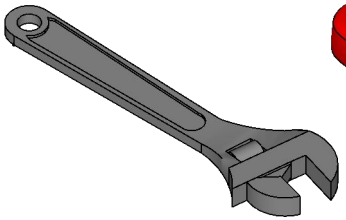

Cresent wrench

Utility knife

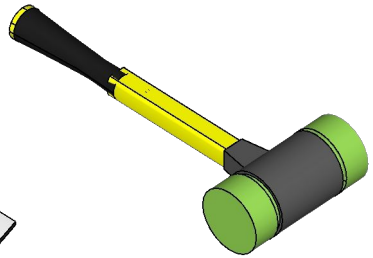

Rubber mallet

Ratchet strap

Details list 1/5

DET 1 ***Article.*** *K-PT-JAL-226D*	**x2**	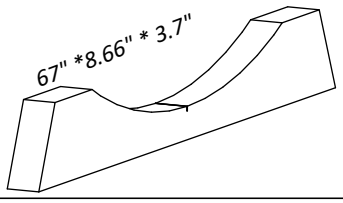	
DET A ***Article.*** *K-STL117/1400*	**x2**	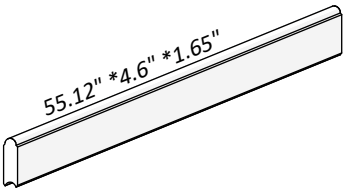	
DET 2 ***Article.*** *T-STL117/1600XLM02*	**x1**	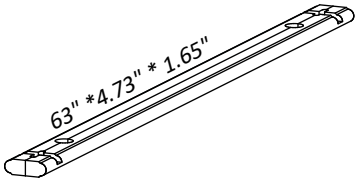	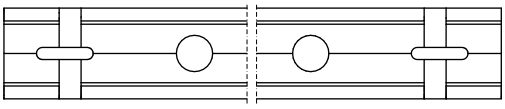
DET 3 ***Article.*** *T-STL117/1600-01*	**x67**	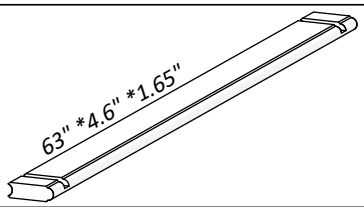	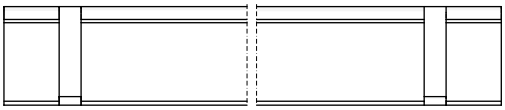
DET 6 ***Article.*** *T-STL117/1600XL-02*	**x2**	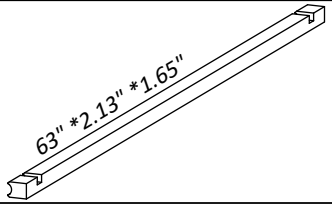	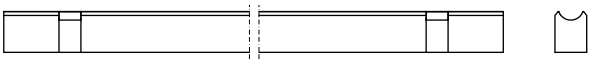
DET 6c/d/e/f ***Article.*** *T-STL117/1600KO-01*	**x1**	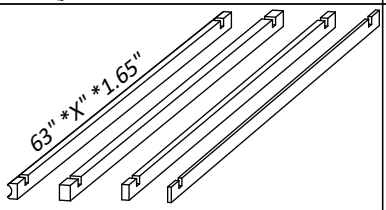	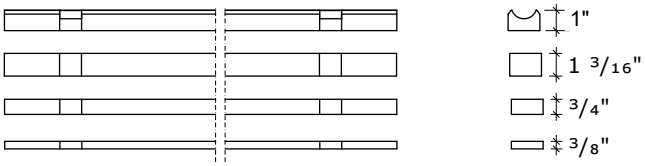
DET S ***Article.*** *26-TE-PR-12/15*	**x2**	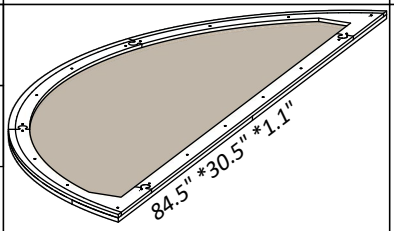	
DET T ***Article.*** *T-SL117/710UK3*	**x2**	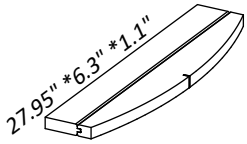	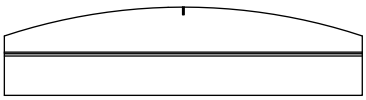
DET Y1 ***Article.*** *T-26-PTS/28-V*	**x1**	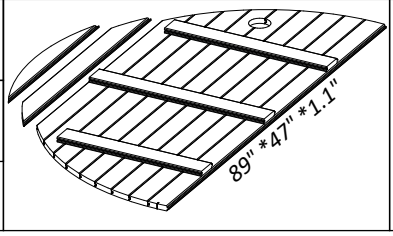	

Details list 2/5

DET Y2 ***Article.*** *T-26-PTS/28-P*	**x1**	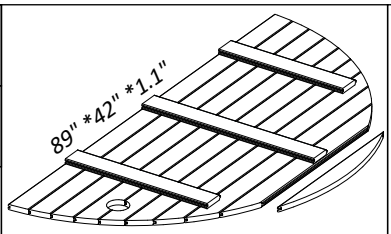	
DET U1 ***Article.*** *K-TL94/2200*	**x1**	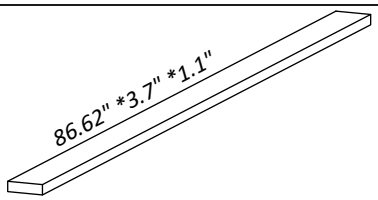	
DET U2 ***Article.*** *K-TL94/2000*	**x1**	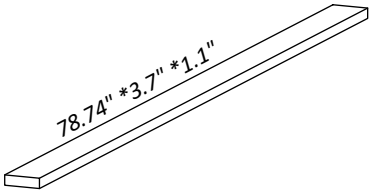	
DET 10 ***Article.*** *TL-LAMOD-2100-KA01*	**x1**	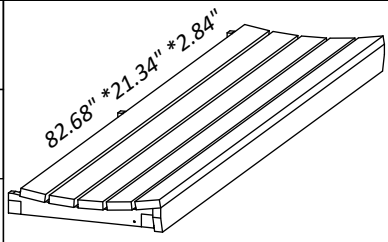	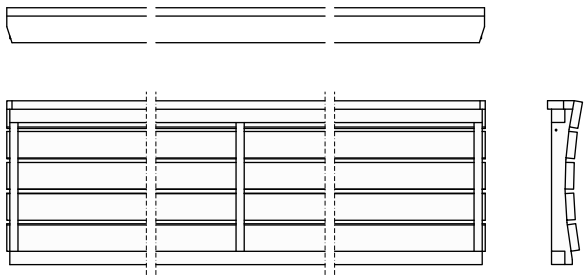
DET 11 ***Article.*** *TL-LAMOD-1770-01*	**x1**	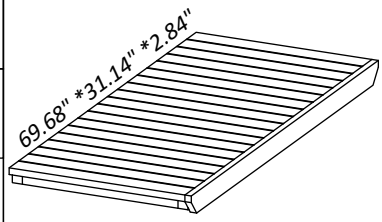	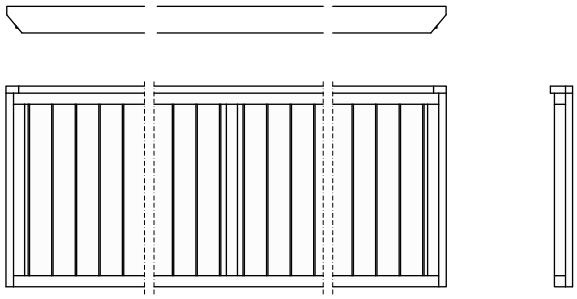
DET 12 ***Article.*** *TL-LAMOD-600-02*	**x1**	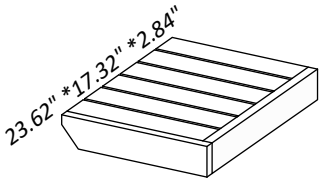	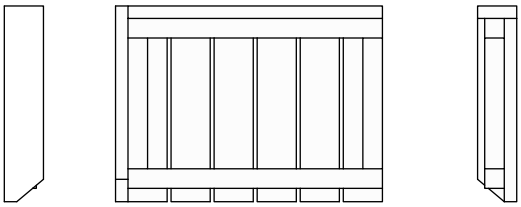
DET 14 ***Article.*** *TL-STMOD-2100-KA01*	**x1**	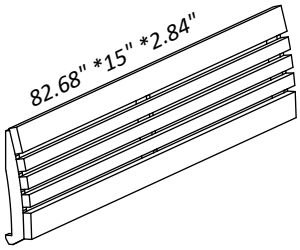	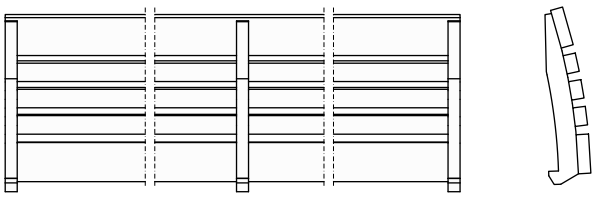

Details list 3/5

DET 13 ***Article.*** *TL-PÕMOD-700/720*	**x1**	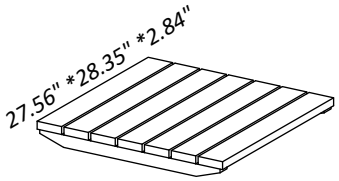	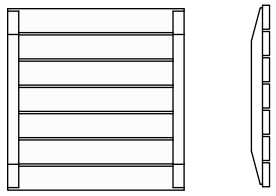
DET 10a ***Article.*** *K-HP44/510XP*	**x2**	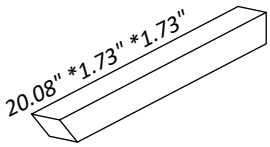	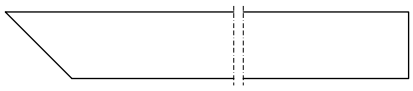
DET 11a ***Article.*** *K-HP44/755XP*	**x2**	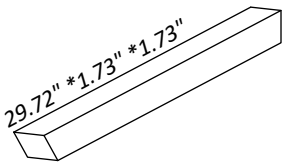	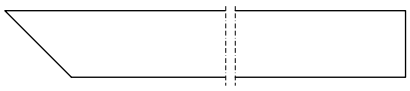
DET 10c ***Article.*** *K-HP44/170*	**x1**	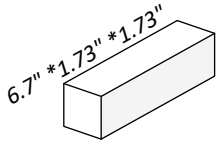	
DET 12b ***Article.*** *K-HP44/300XP*	**x1**	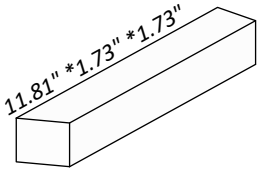	
DET 10b ***Article.*** *K-HP44/265*	**x1**	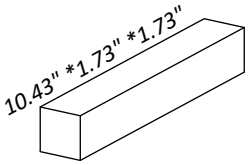	
DET 21 ***Article.*** *U-7/192*	**x1**	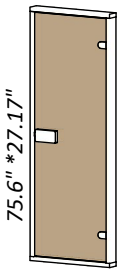	
DET 21c ***Article.*** *K-HP44/1920*	**x2**	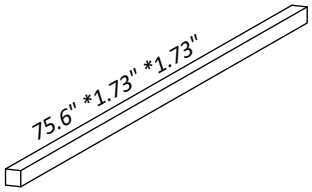	
DET 21d ***Article.*** *K-HP44/780*	**x2**	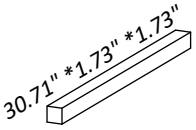	
DET 21a ***Article.*** *K-HL44/1890*	**x2**	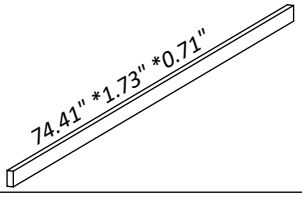	

Details list 4/5

DET 21b ***Article.*** *K-HL44/750*	**x2**	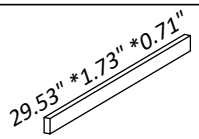	
DET 16 ***Article.*** *2-TPI710*	**x1**	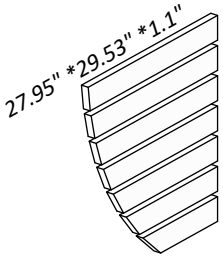	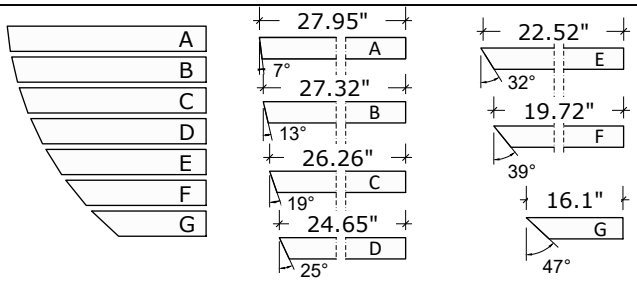
DET 15a ***Article.*** *TL-LAV90/685X*	**x1**	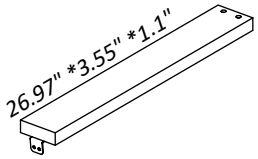	
DET 15b ***Article.*** *TL-LAV90/500XP-XL*	**x1**	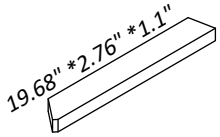	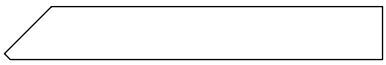
DET 15d ***Article.*** *TL-LAV42/330XP-XP*	**x1**	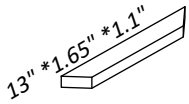	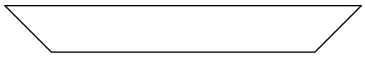
DET 15c ***Article.*** *KI-LEK15*	**x2**		
DET 22 ***Article.*** *T-STL-1600-XX*	**x2**	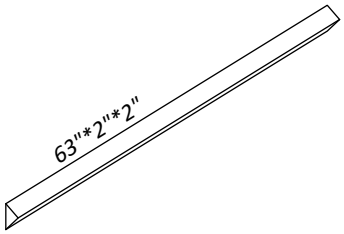	
DET N ***Article.*** *KAT-HAR-MUST*	**x7**	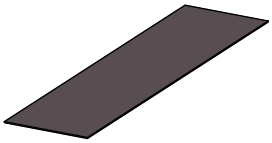	
DET O ***Article.*** *KAT-SIN-MUST*	**x55**	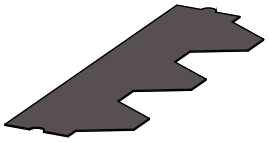	
DET 25 ***Article.*** *MU-OL-SAUN*	**x18**	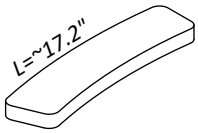	

Details list 5/5

DET B ***Article.*** *MU-VIT7040-KLZN*	**x2**	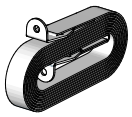	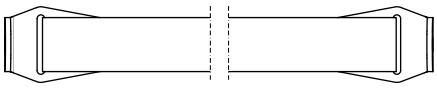
DET W ***Article.*** *MU-TRAPP*	**x2** kmpl	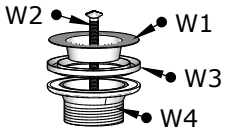	
DET V ***Article.*** *KI-VIN-25/40/40-ZN*	**x4**	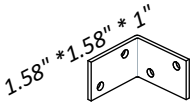	
DET G ***Article.*** *MU-VENT-100-PU*	**x1**		
DET F ***Article.*** *MU-VENT-100-ZN*	**x3**		

Article.
KI-KERL-12-RV2

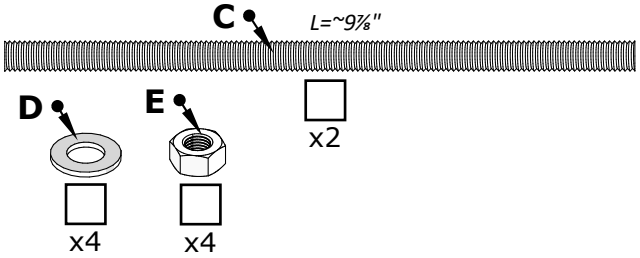

Article.
KI-USA-150-220

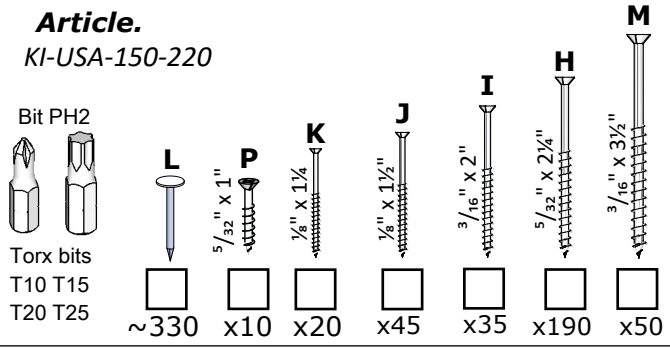

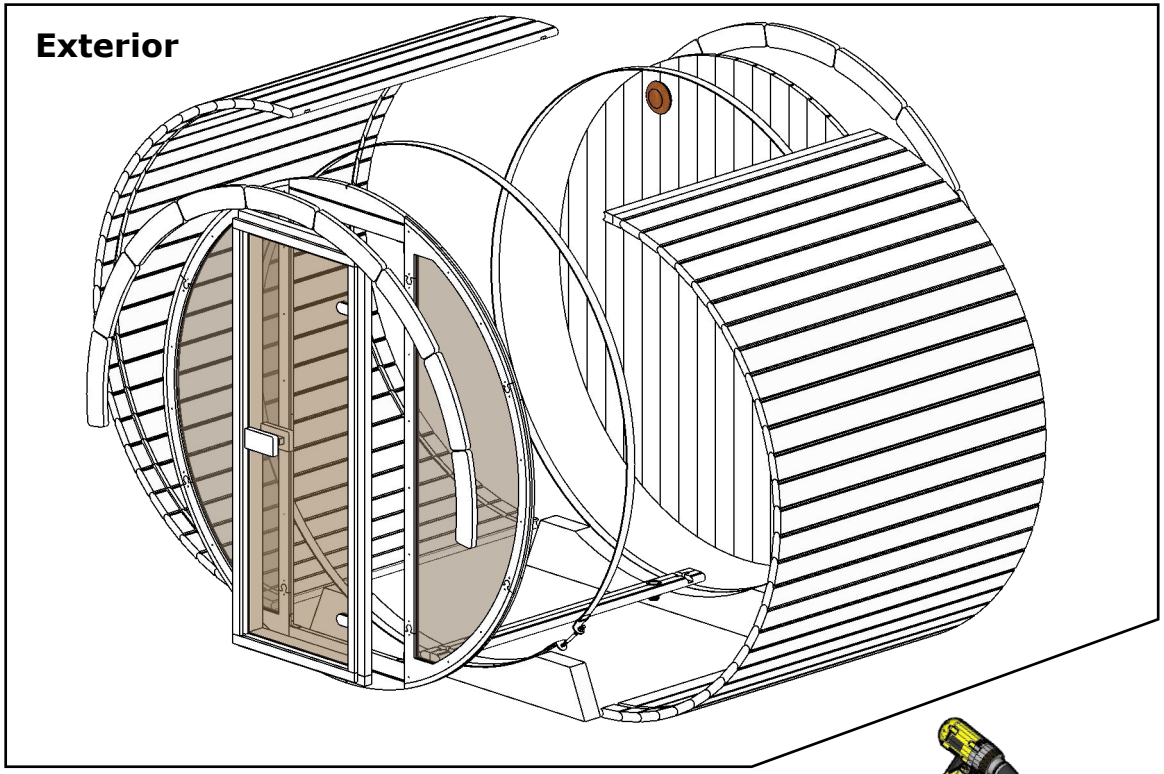
Exterior

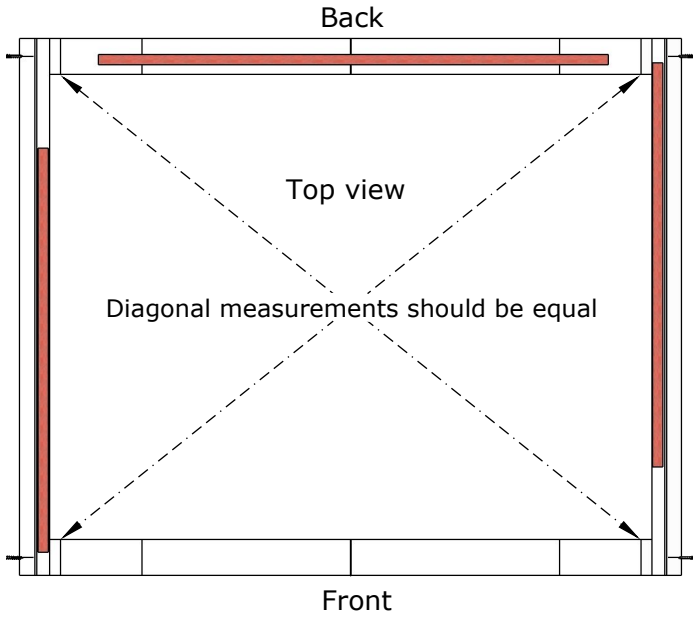
Back
Top view
Diagonal measurements should be equal
Front

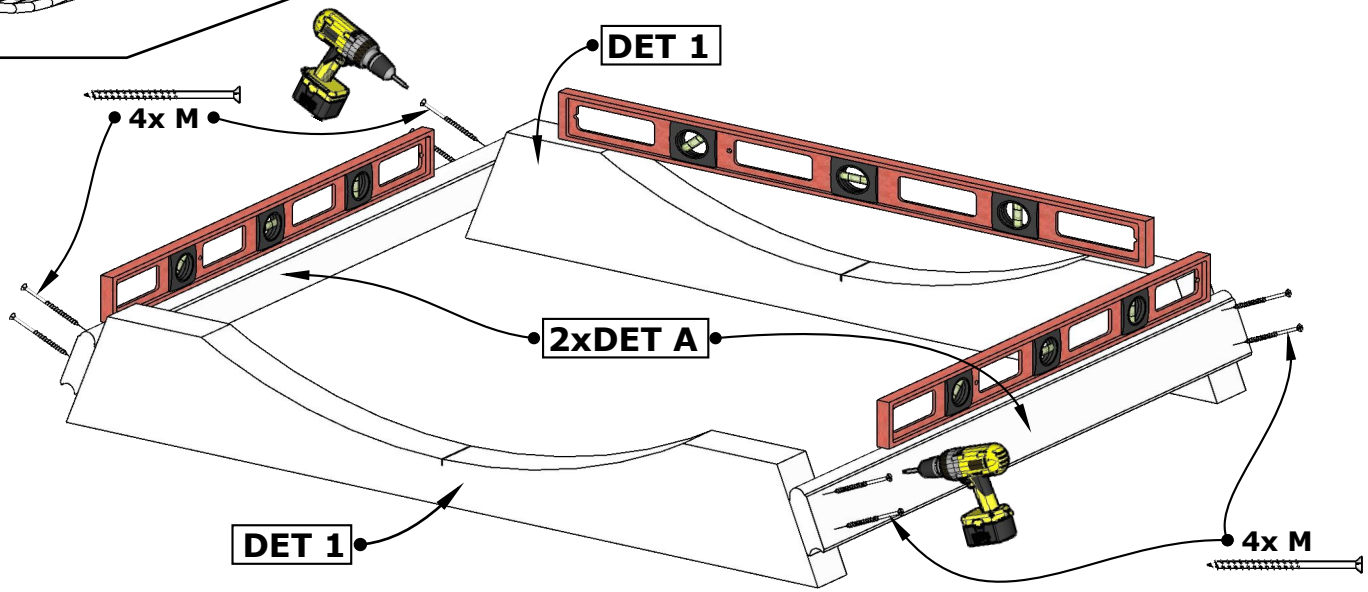
DET 1
4x M
2xDET A
DET 1
4x M

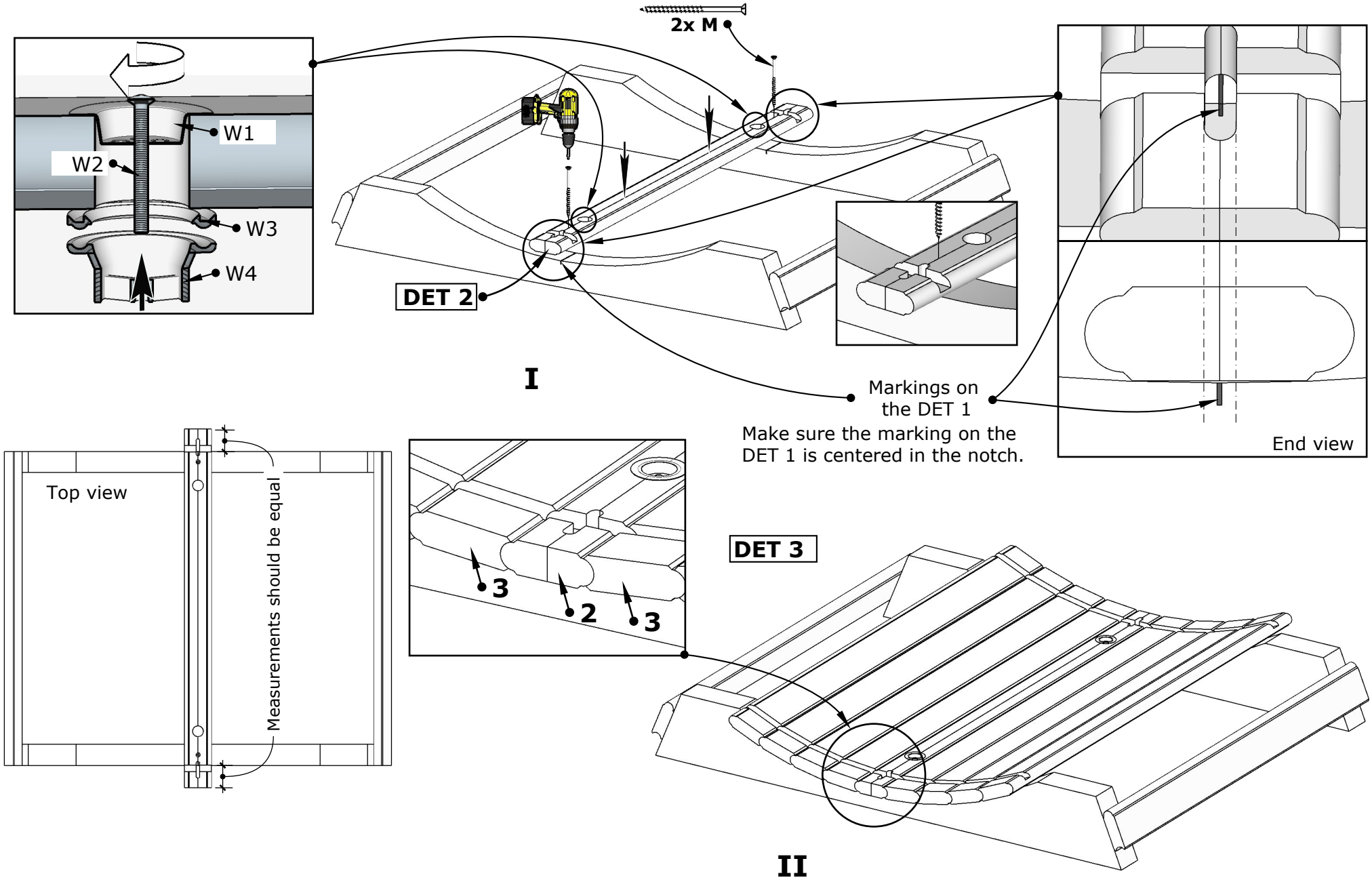
2x M
W1
W2
W3
W4
DET 2
I
Markings on
the DET 1
Make sure the marking on the
DET 1 is centered in the notch.
End view
Top view
Measurements should be equal
3
2
3
DET 3
II

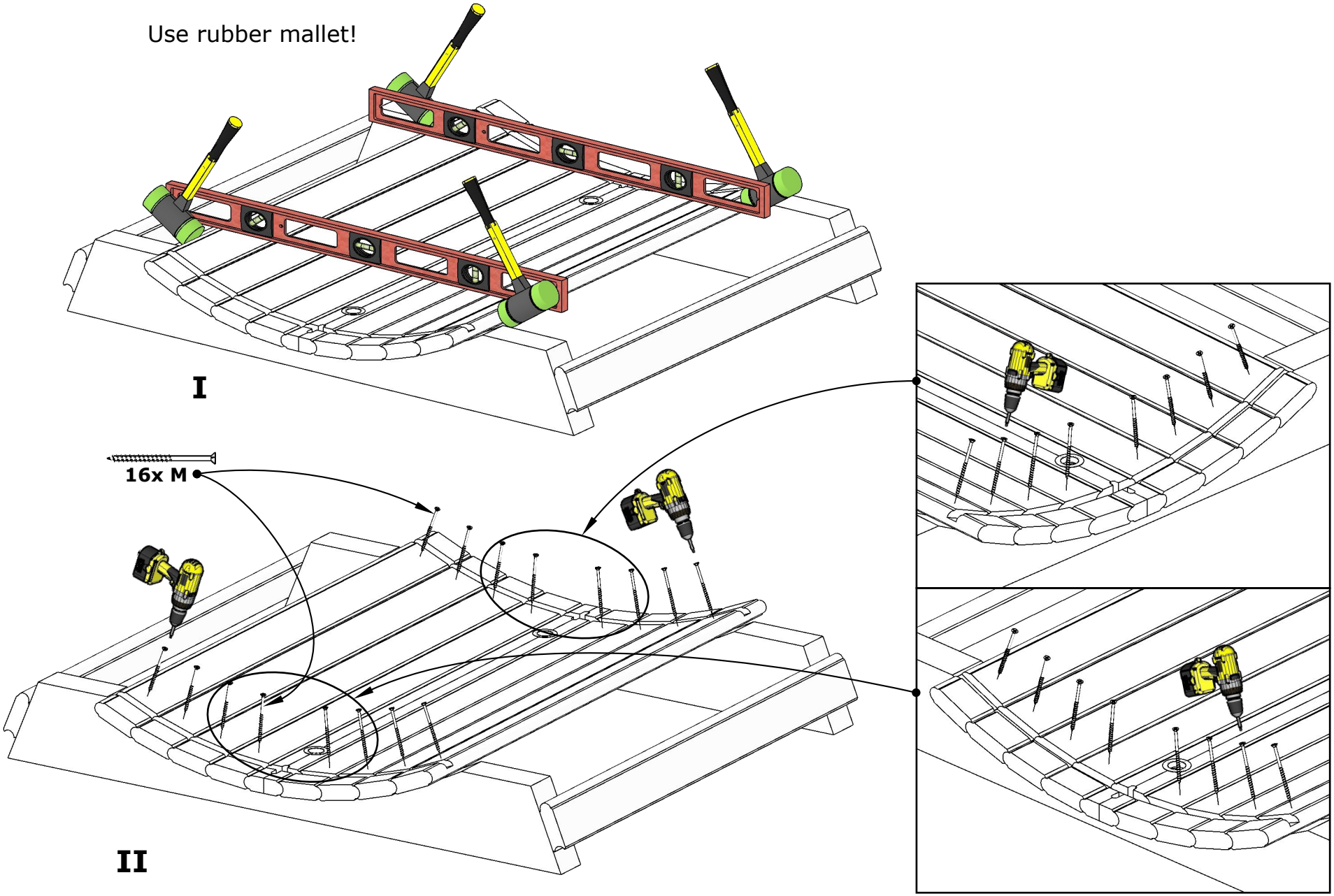
Use rubber mallet!
I
16x M
II

Front glass-wall assembly

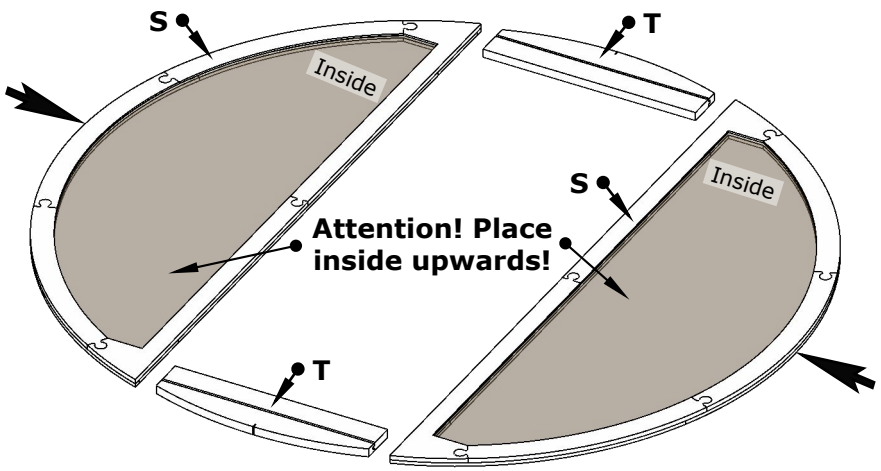

I

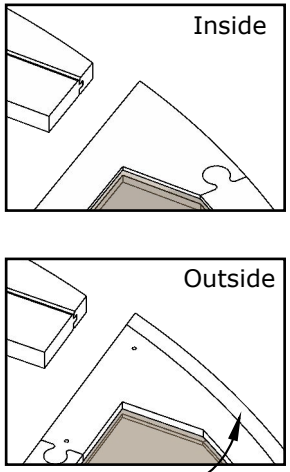

Outside will have an extra notch around the edge.

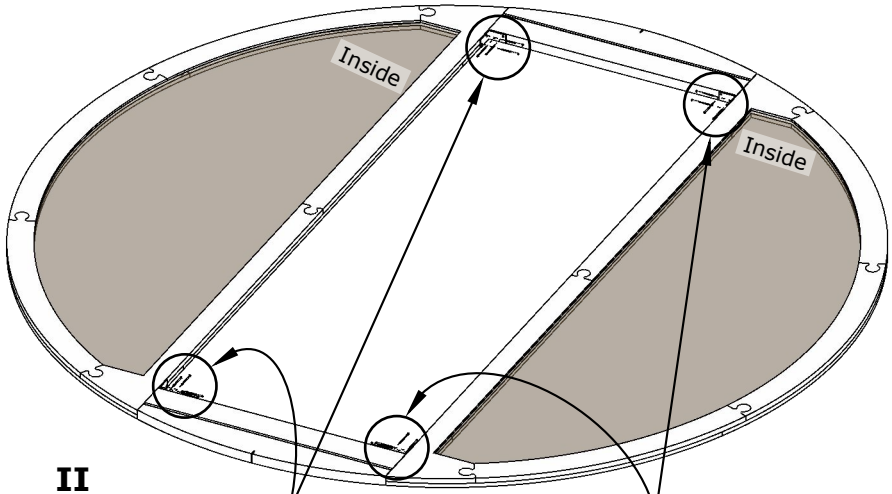

II

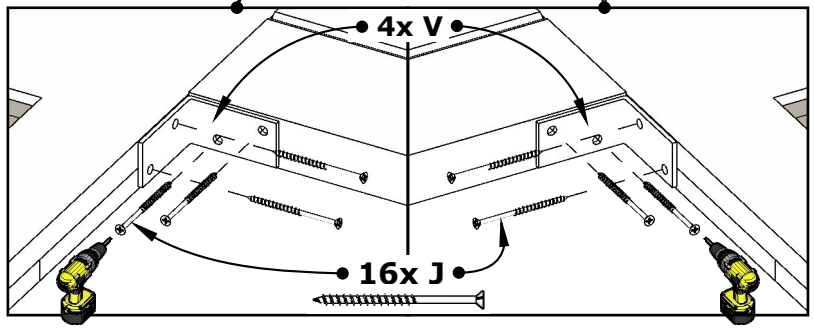

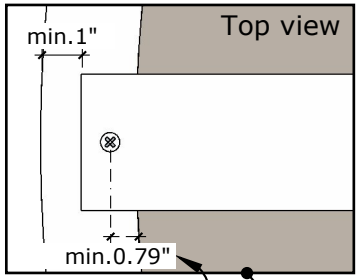

Attention! Be extra careful to not hit the glass!!!

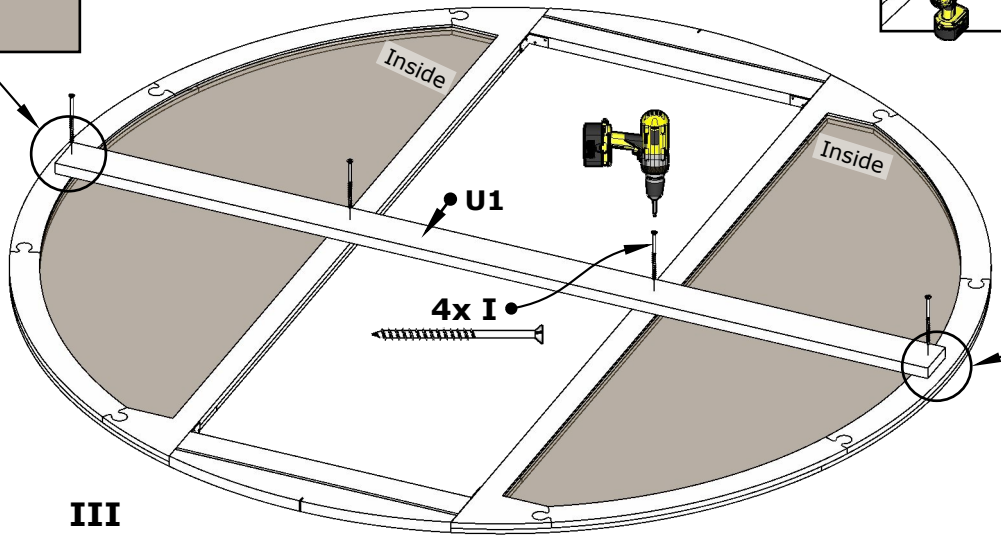

III

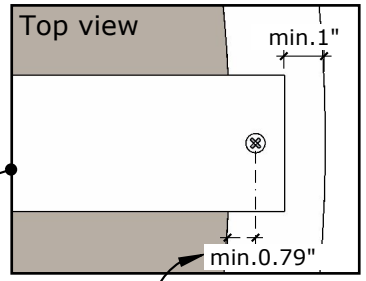

Attention! Be extra careful to not hit the glass!!!

Wooden back wall assembly

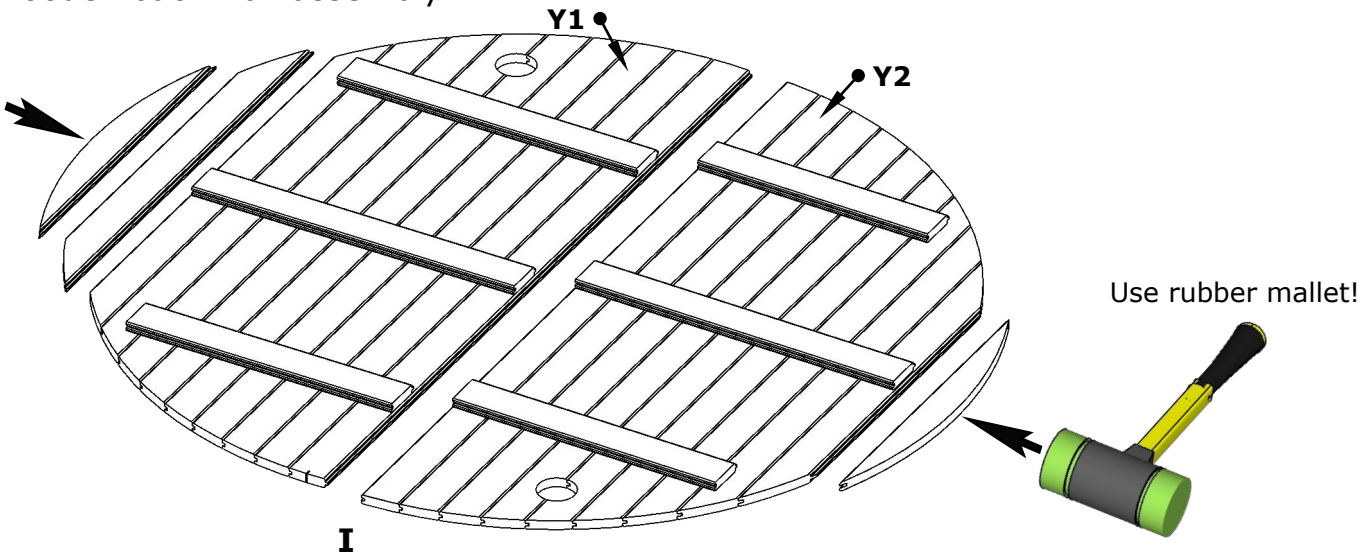

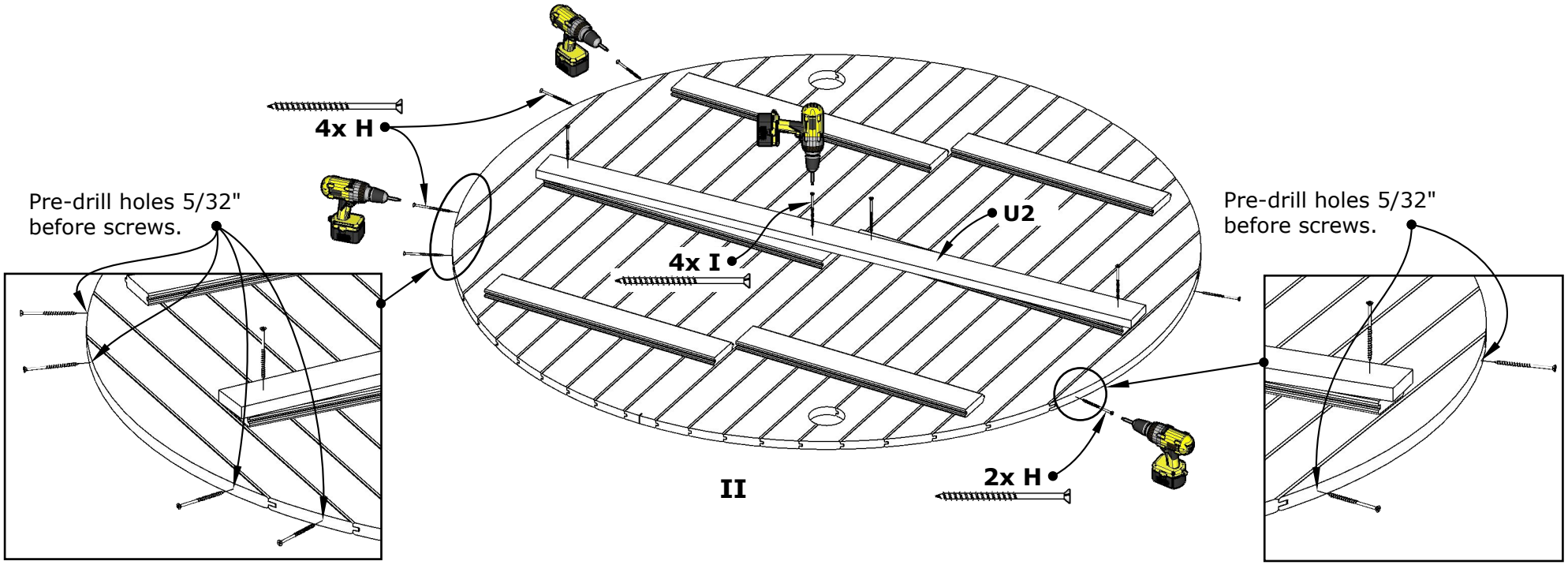

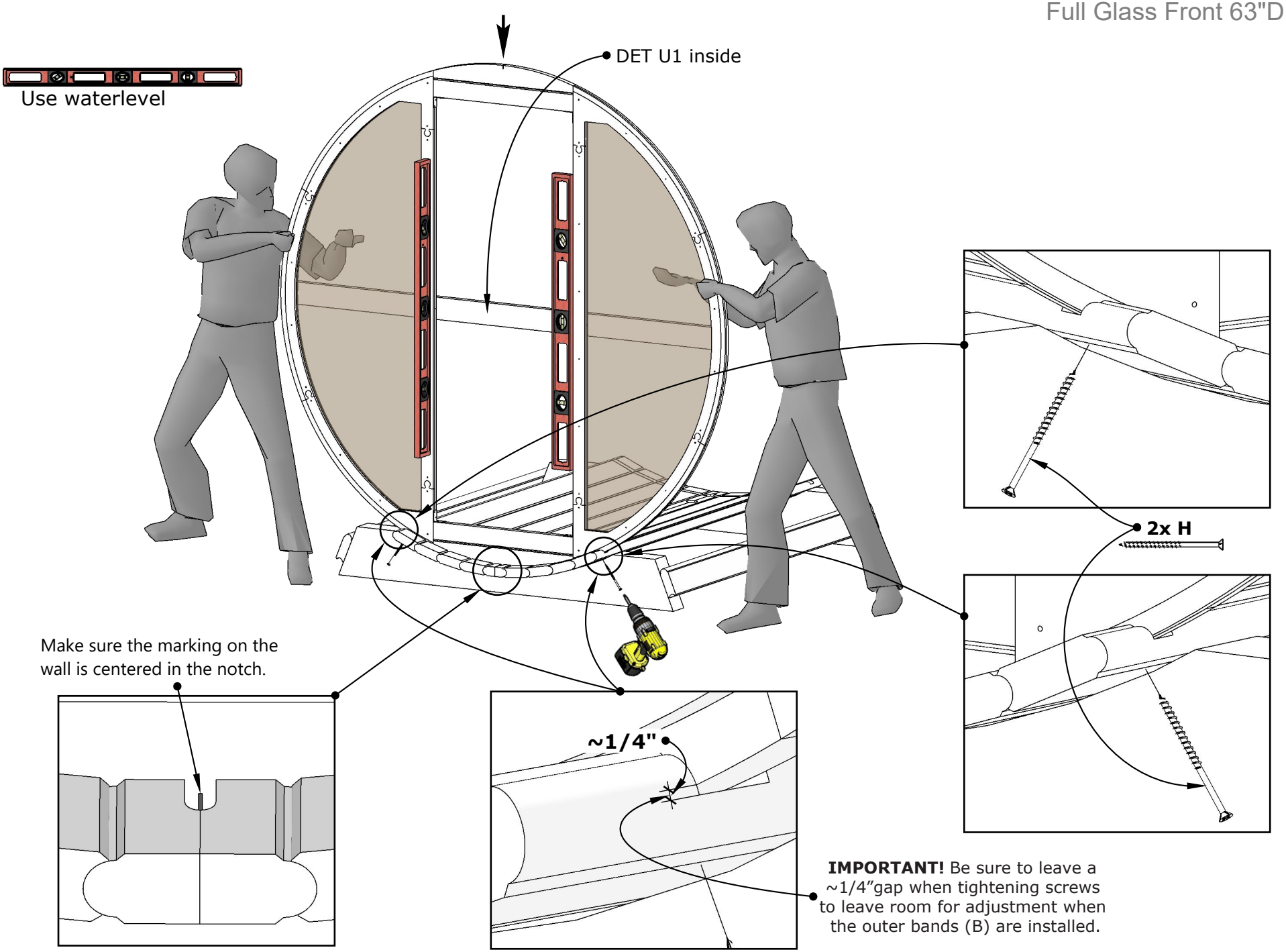
Use waterlevel
DET U1 inside
2x H
Make sure the marking on the wall is centered in the notch.
~1/4"
IMPORTANT! Be sure to leave a ~1/4"gap when tightening screws to leave room for adjustment when the outer bands (B) are installed.

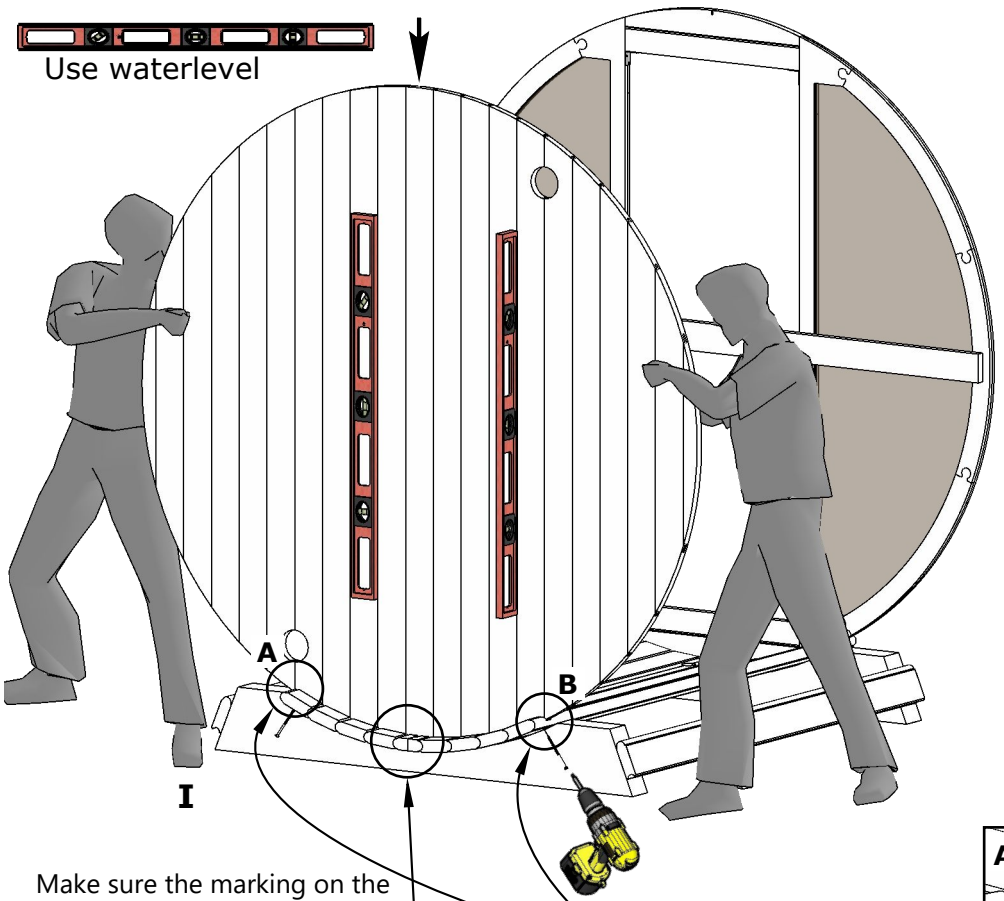

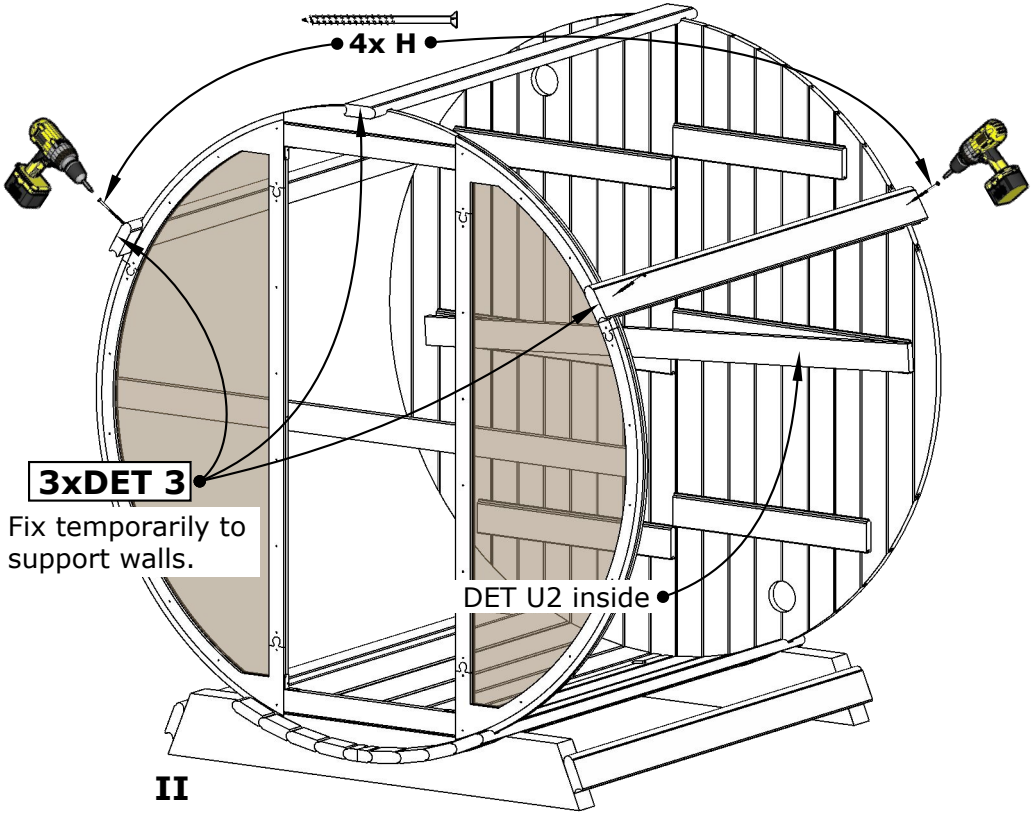

Make sure the marking on the wall is centered in the notch.

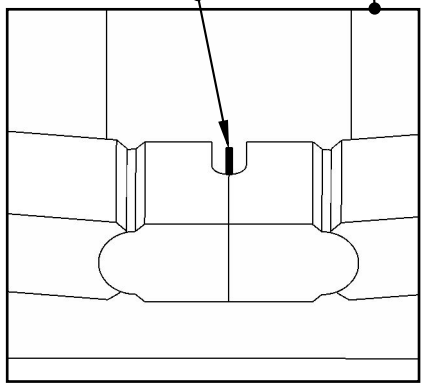

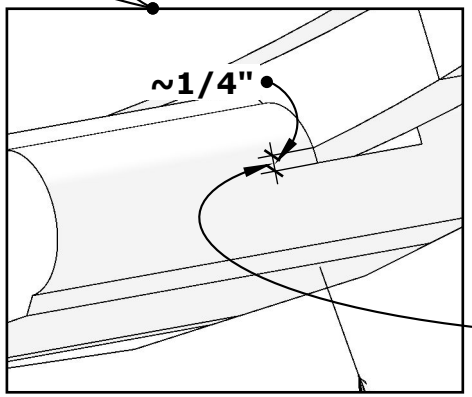

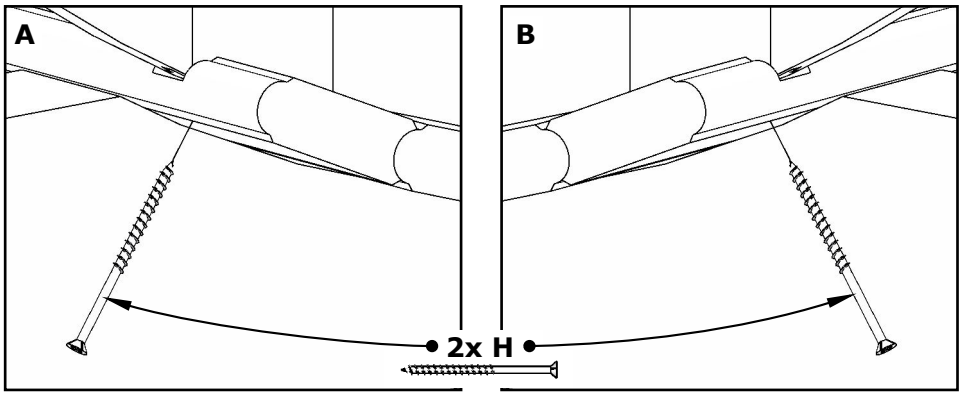

IMPORTANT! Be sure to leave a ~1/4”gap when tightening screws to leave room for adjustment when the outer bands (B) are installed.

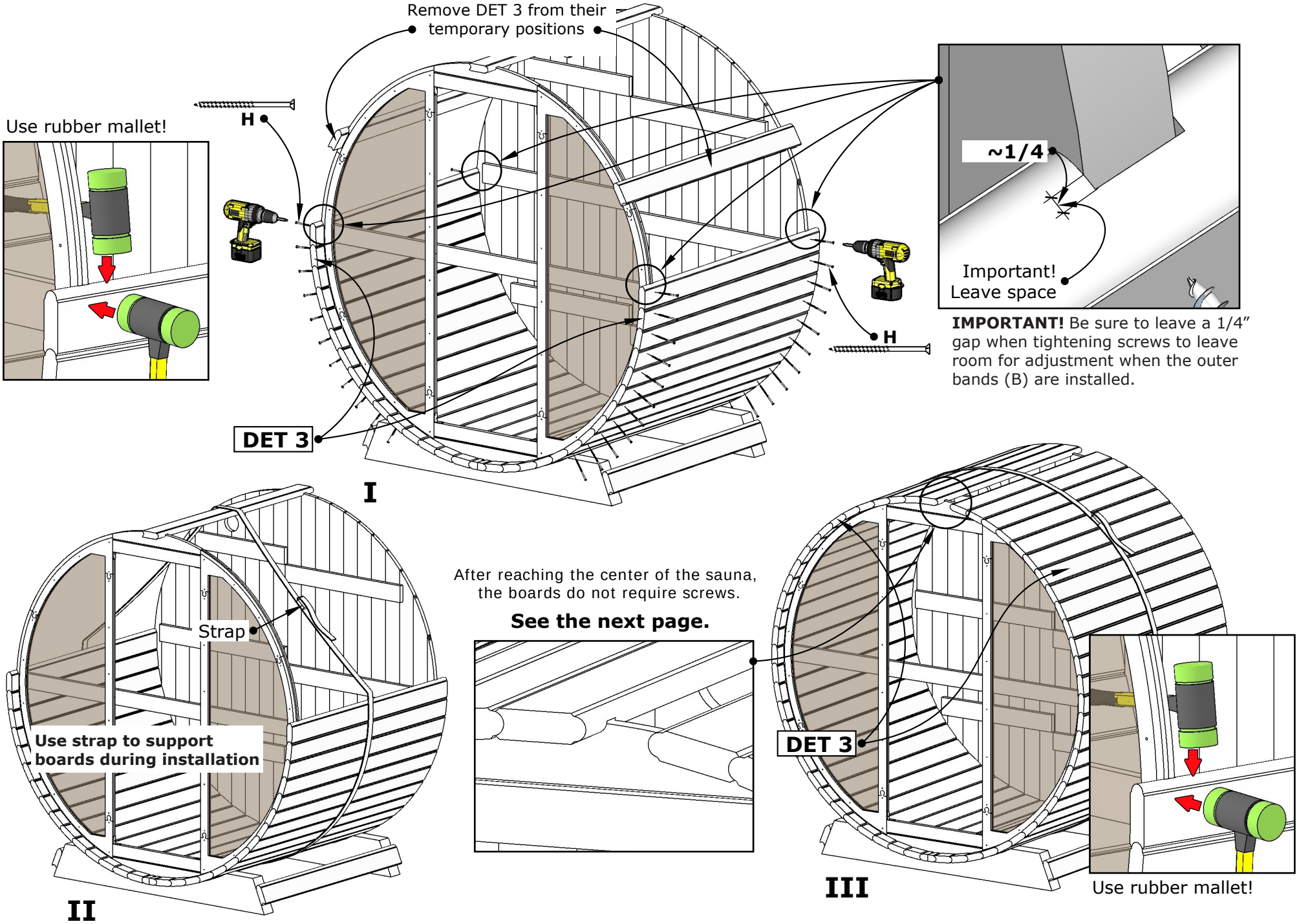
Remove DET 3 from their temporary positions
Use rubber mallet!
H
H
DET 3
I
~1/4
Important! Leave space
IMPORTANT! Be sure to leave a 1/4" gap when tightening screws to leave room for adjustment when the outer bands (B) are installed.
Strap
Use strap to support boards during installation
II
After reaching the center of the sauna, the boards do not require screws.
See the next page.
DET 3
III
Use rubber mallet!

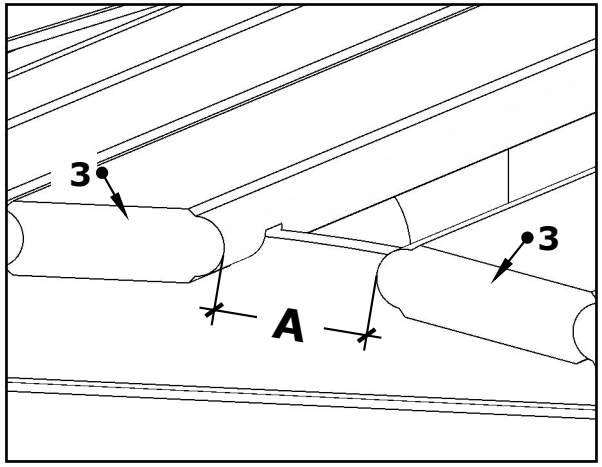

I

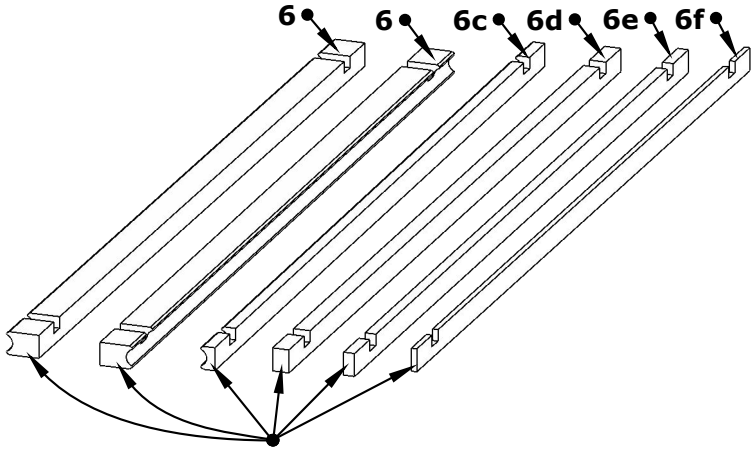

II

Join boards together (as shown in diagram III) that will bridge the width of the "A" gap. It is recommended that the combined boards are approximately 1/4" wider than the gap.

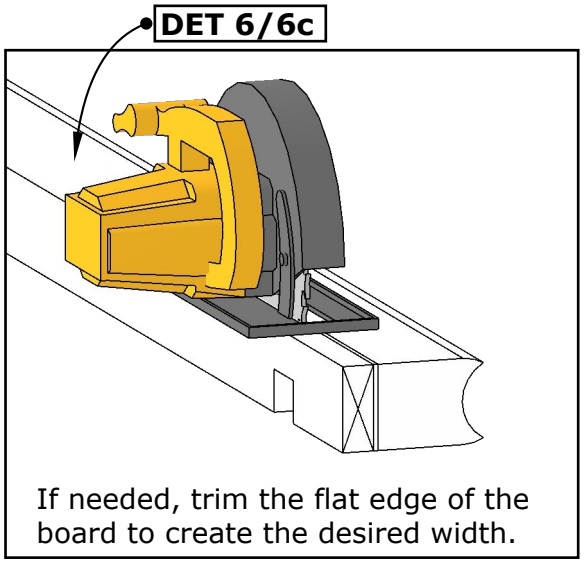

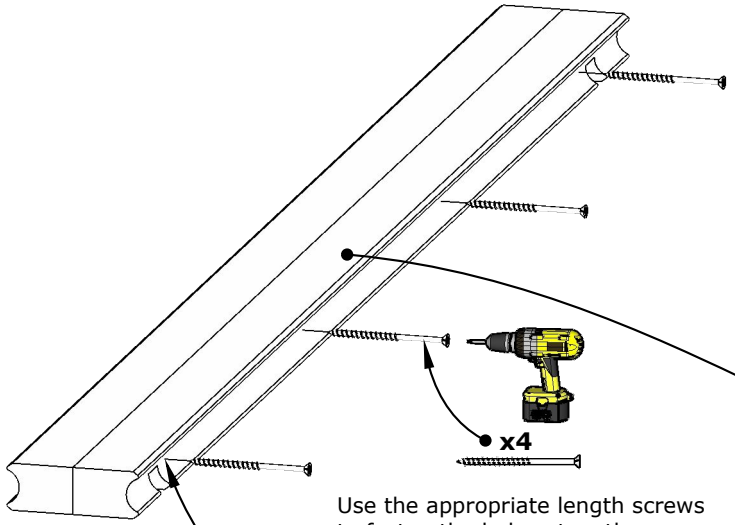

III

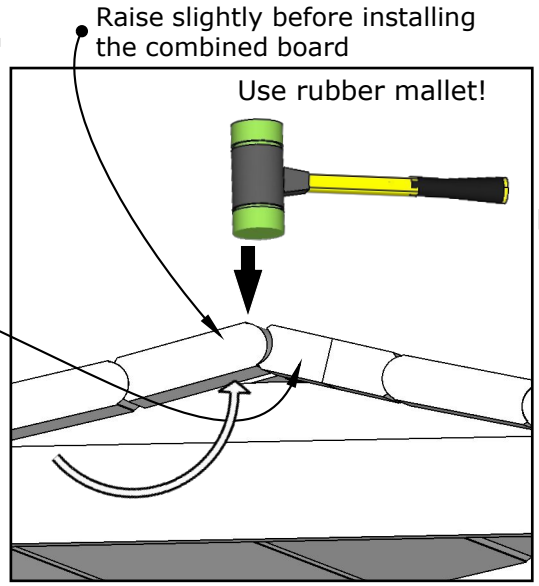

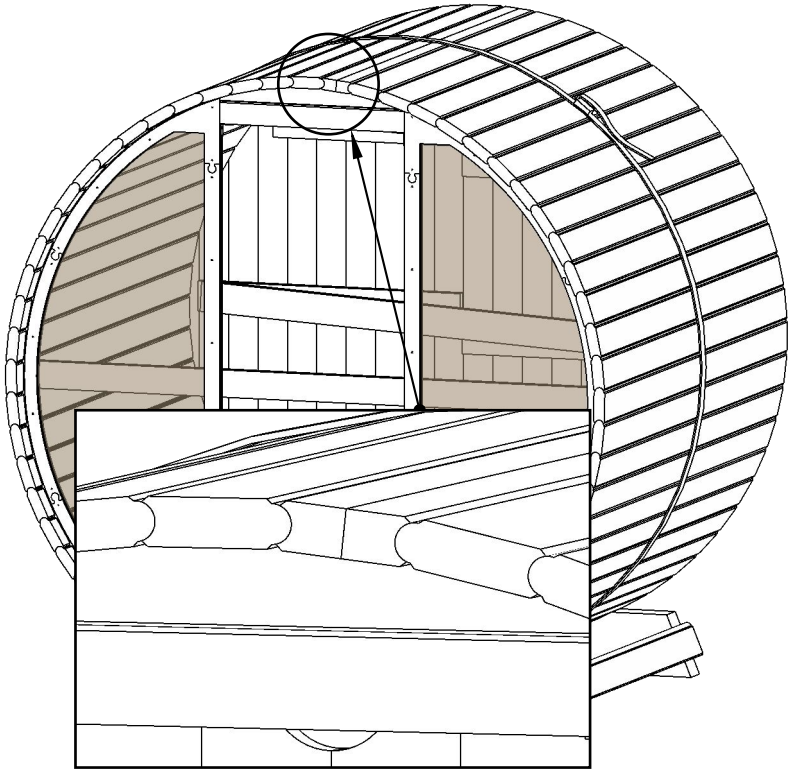

IV

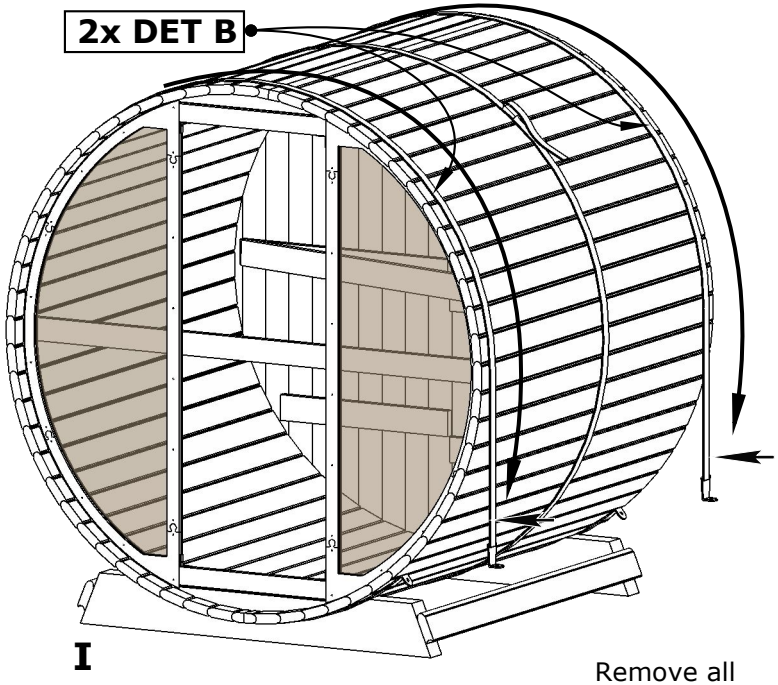
2x DET B
I

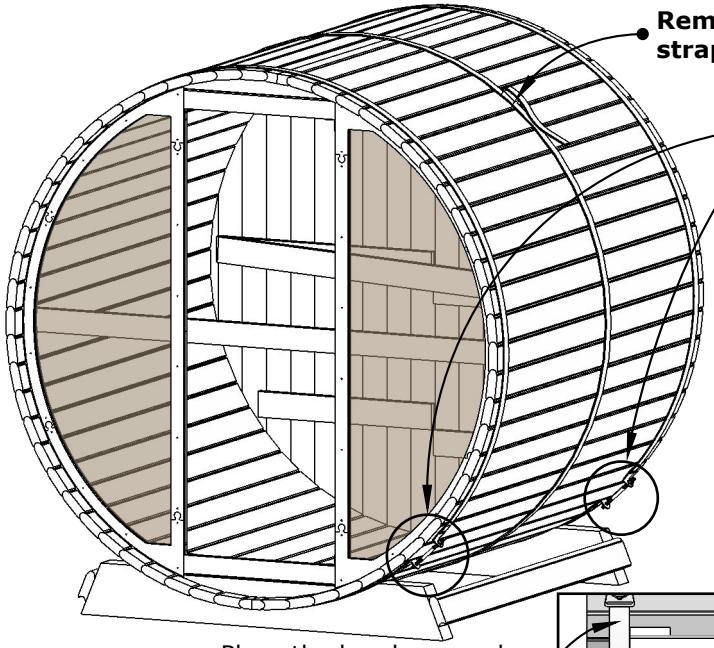
Remove strap
Place the bands around the barrel on the outer side of the cradle.

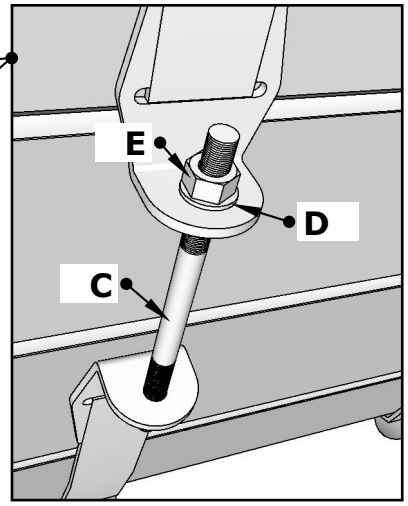
Attention! Tighten all nuts securely!
E
D
C

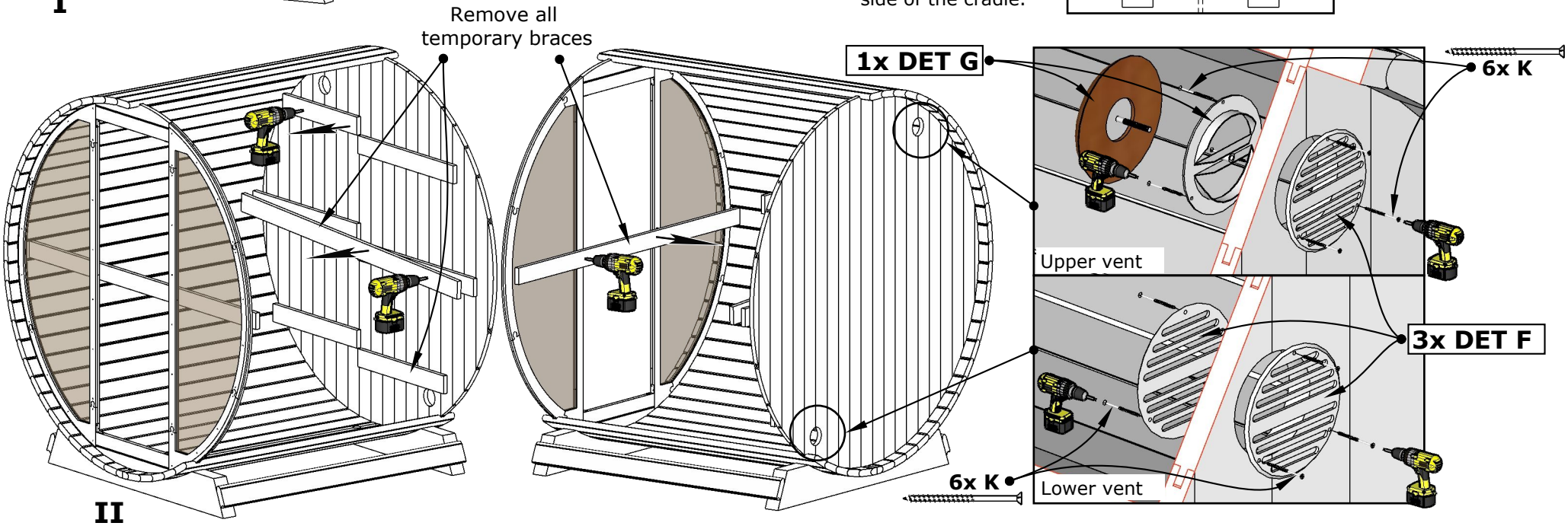
Remove all temporary braces
1x DET G
6x K
Upper vent
3x DET F
6x K
Lower vent
II

Interior

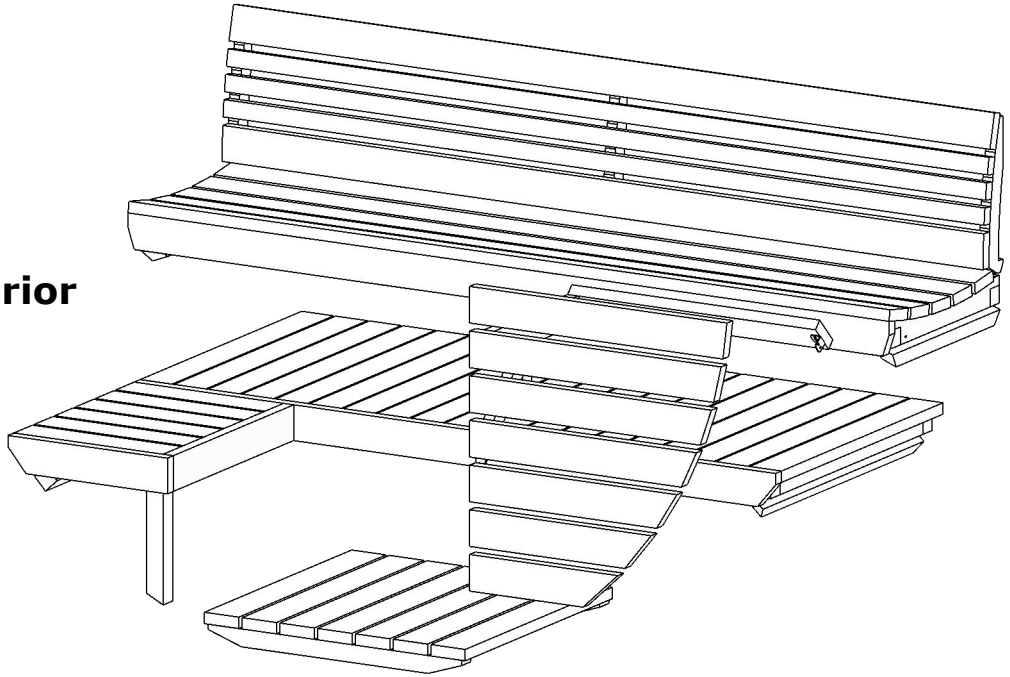

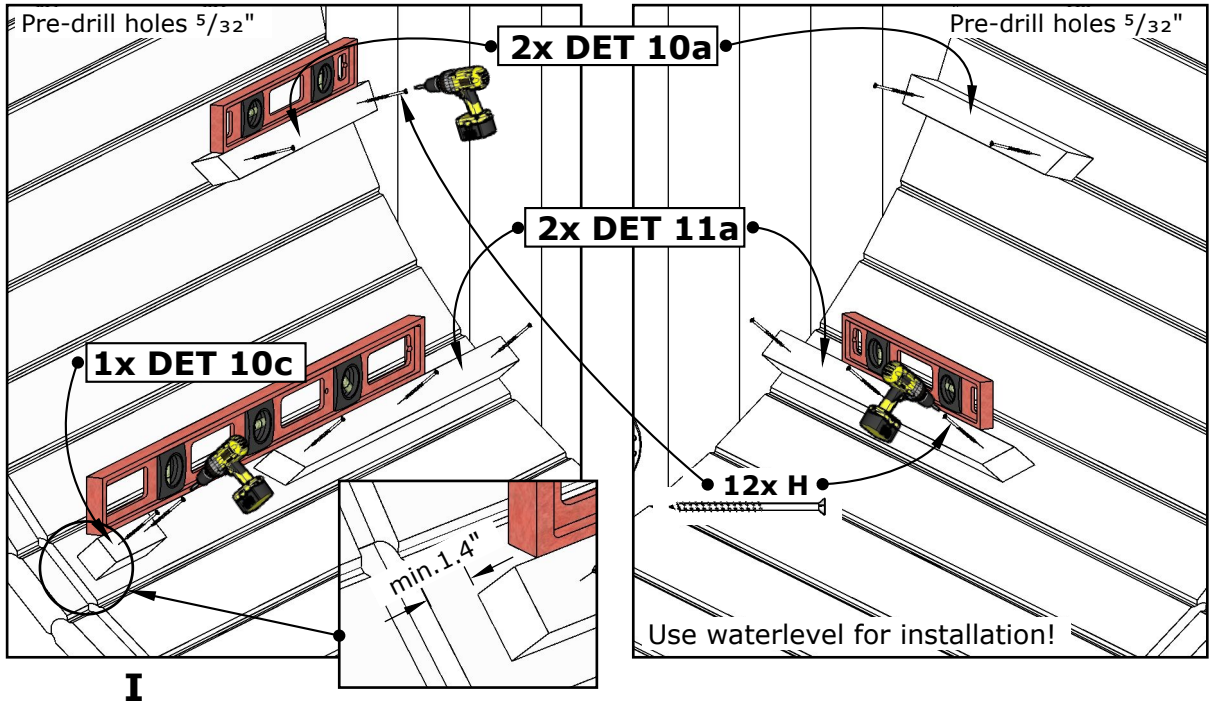

I

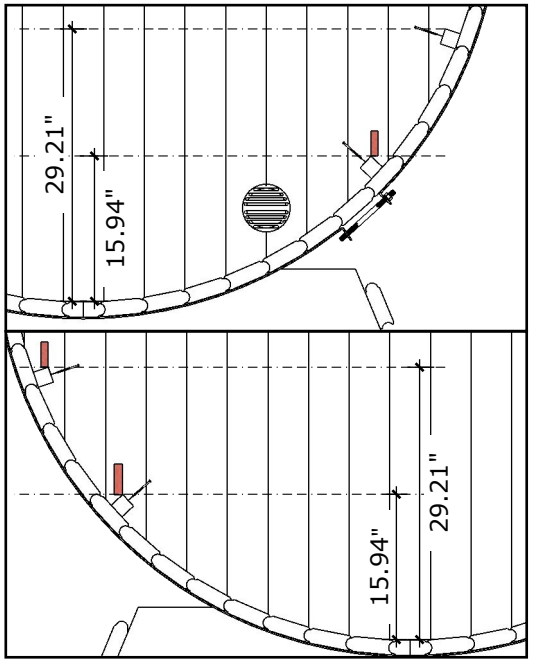

Use waterlevel for installation!

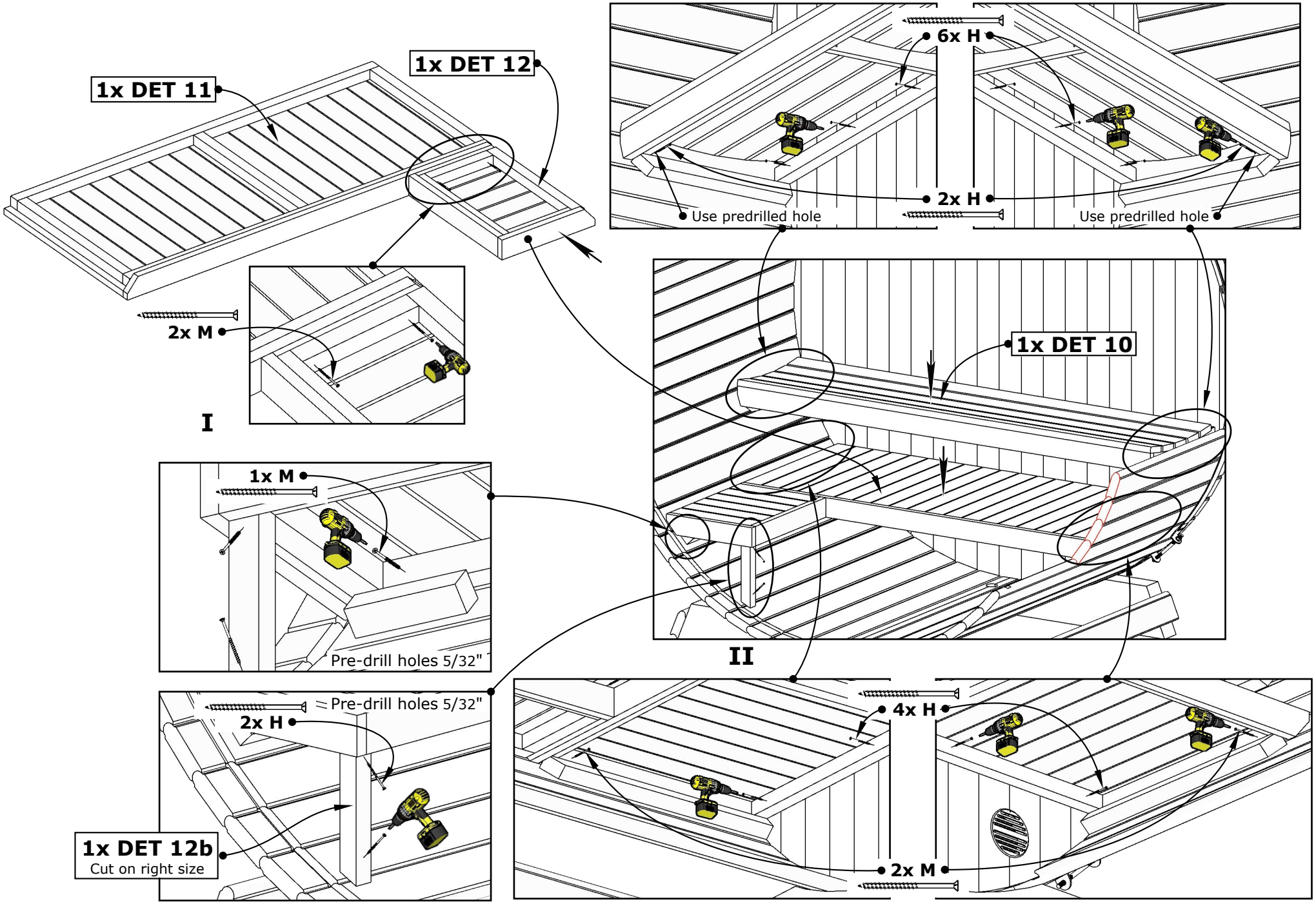
1x DET 11
1x DET 12
2x M
I
6x H
2x H
Use predrilled hole
Use predrilled hole
1x DET 10
II
1x M
Pre-drill holes 5/32"
Pre-drill holes 5/32"
2x H
1x DET 12b
Cut on right size
4x H
2x M

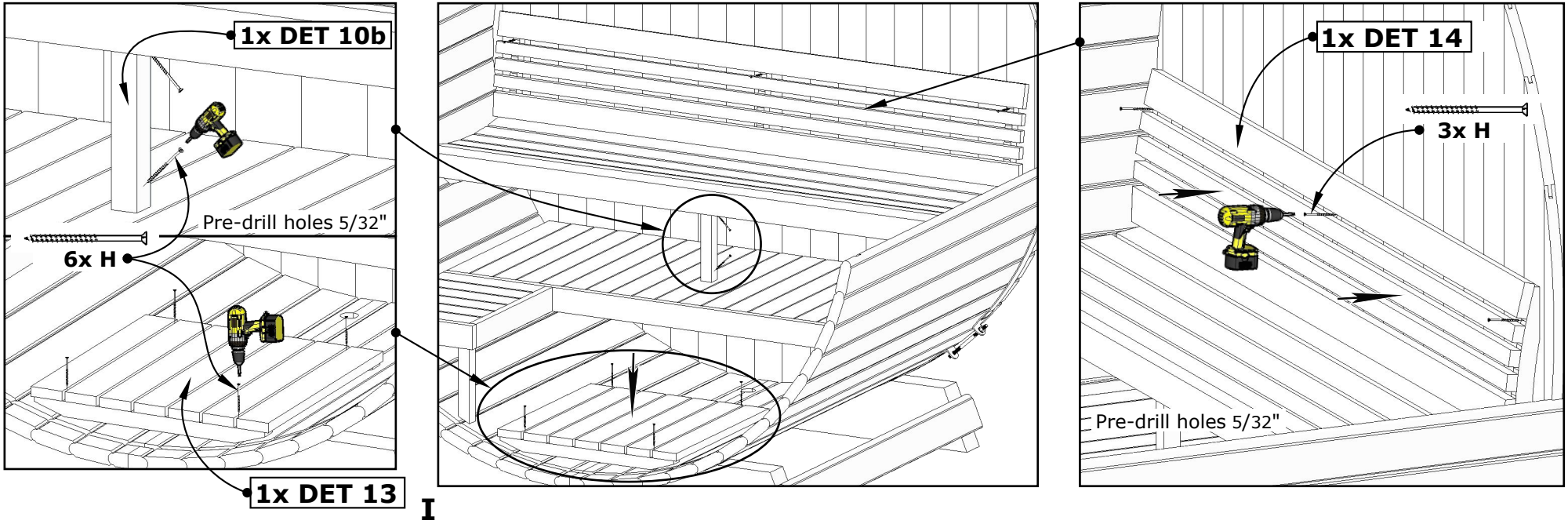
1x DET 10b
Pre-drill holes 5/32"
6x H
1x DET 13
I
1x DET 14
3x H
Pre-drill holes 5/32"

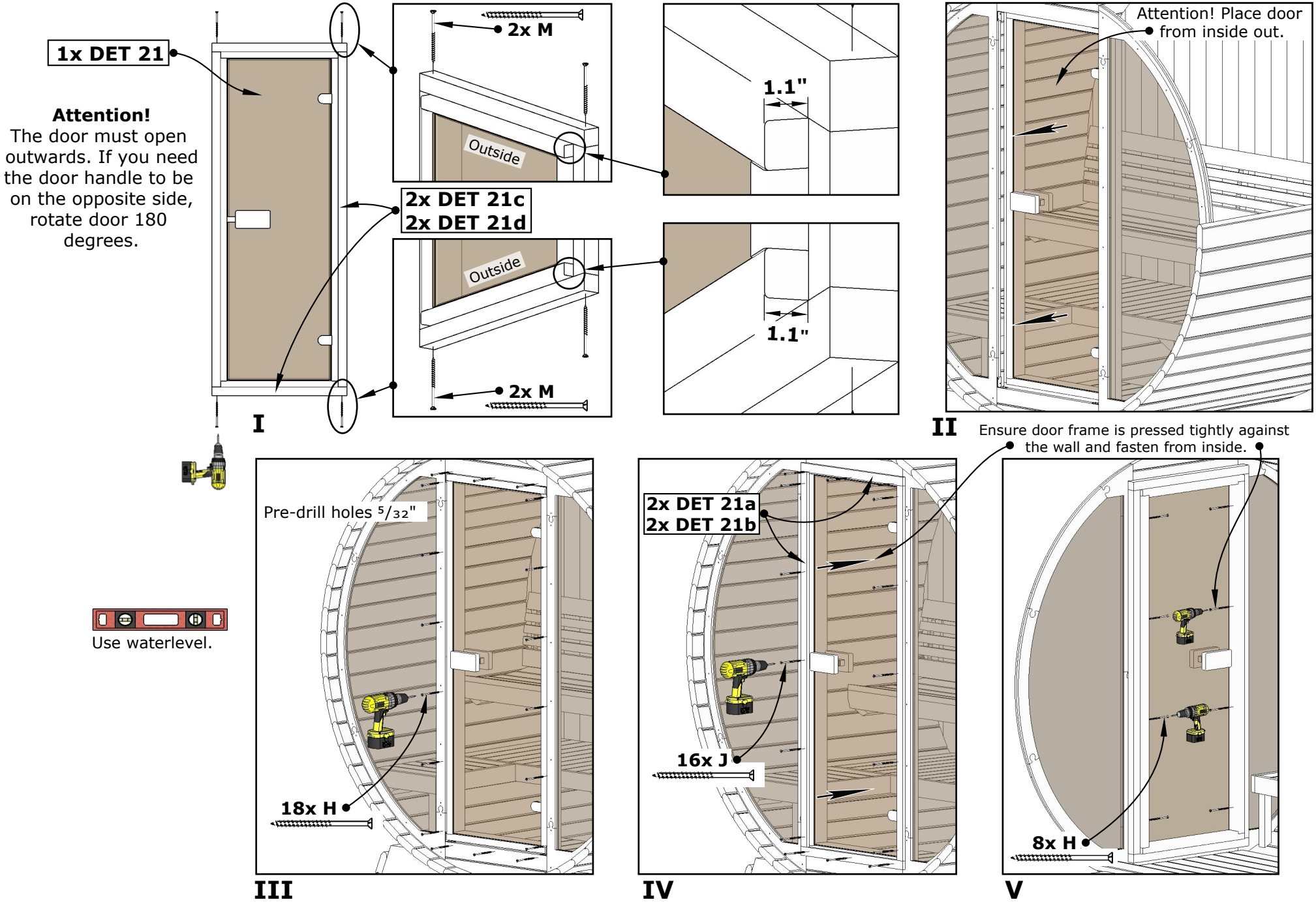
1x DET 21
Attention!
The door must open outwards. If you need the door handle to be on the opposite side, rotate door 180 degrees.
2x M
Outside
1.1"
2x DET 21c
2x DET 21d
Outside
1.1"
2x M
I
Attention! Place door from inside out.
II
Ensure door frame is pressed tightly against the wall and fasten from inside.
Use waterlevel.
Pre-drill holes 5/32"
18x H
III
2x DET 21a
2x DET 21b
16x J
IV
8x H
V

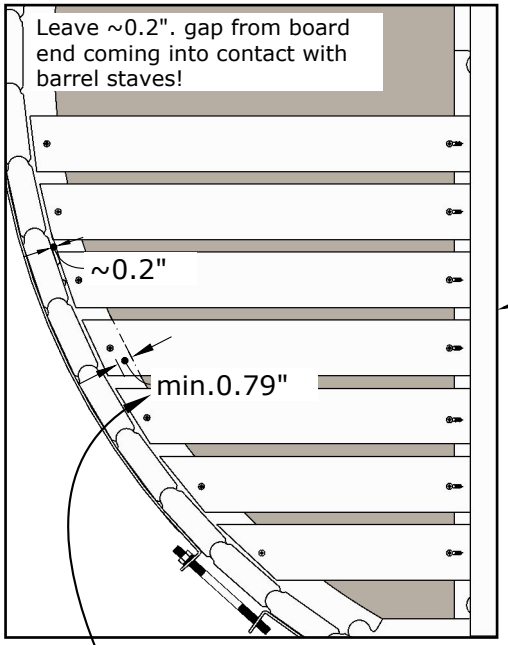

I

Please be careful!!! Do not hit the glass with the screw.

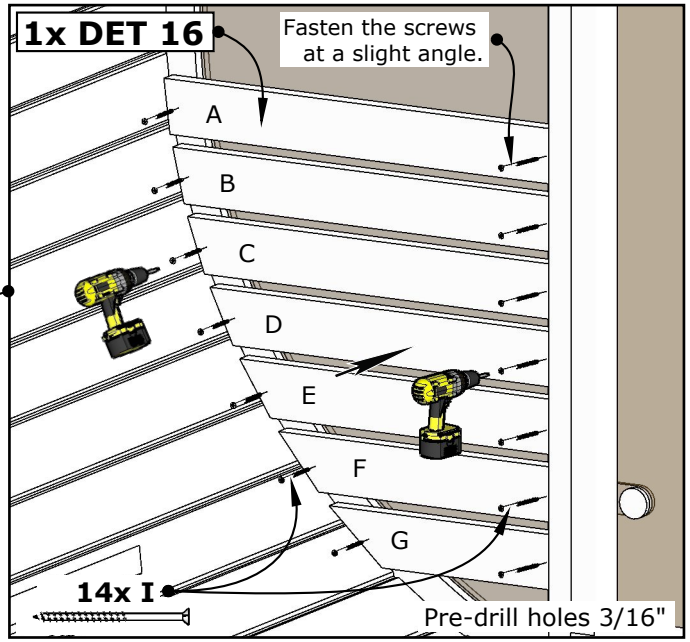

ATTENTION!
HEATER GUARD MAY NOT MEET THE SAFETY DISTANCES OF ALL HEATERS AND SHOULD NOT BE USED IF THE HEATER DOES NOT FIT!

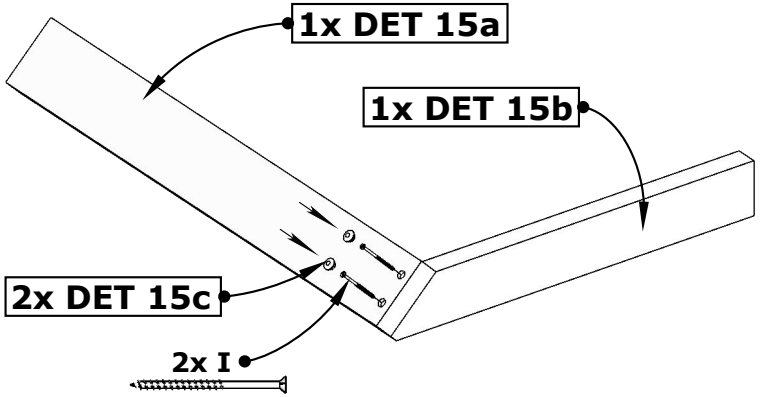

If Your sauna heater is smaller, You can cut DET 15b to lenght from the non-tapered end to better fit your heater.

II

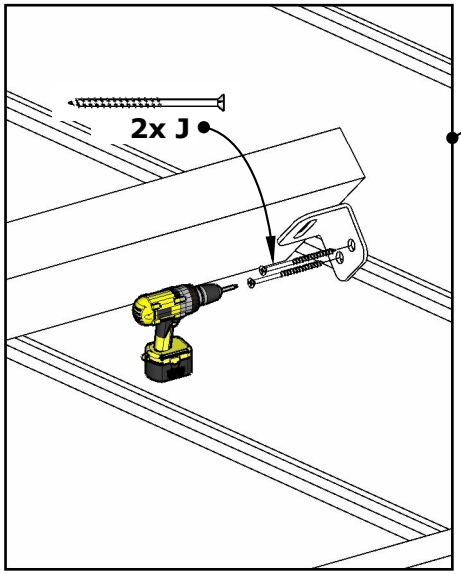

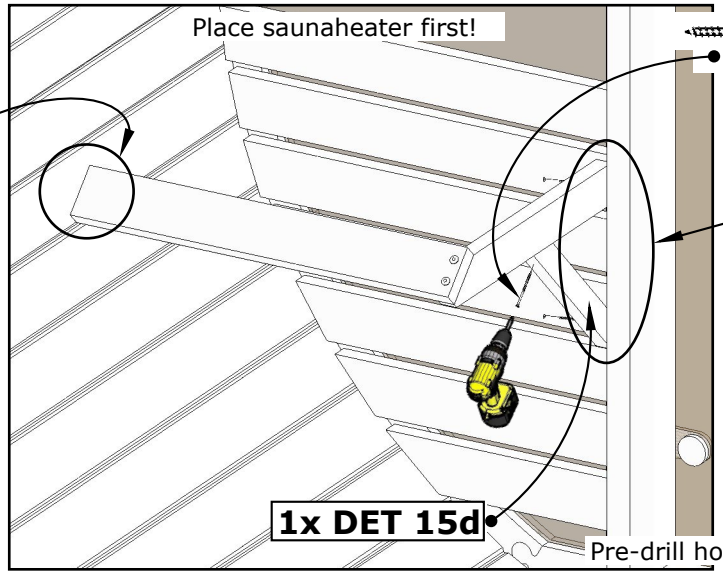

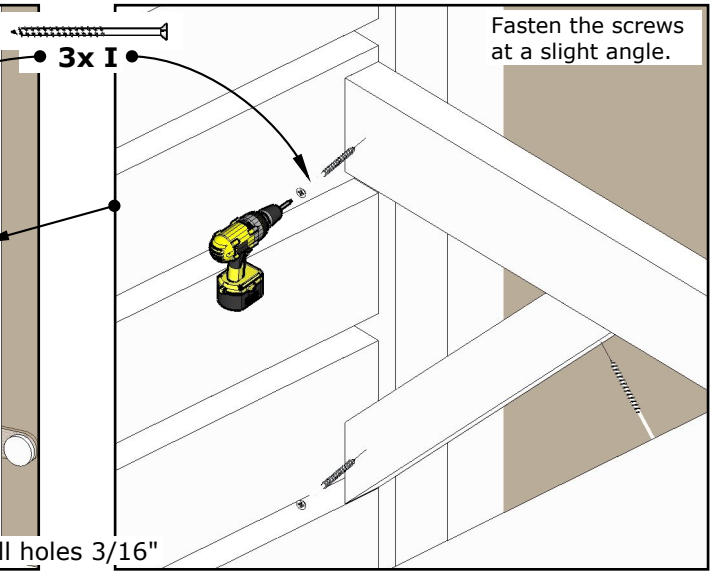

III

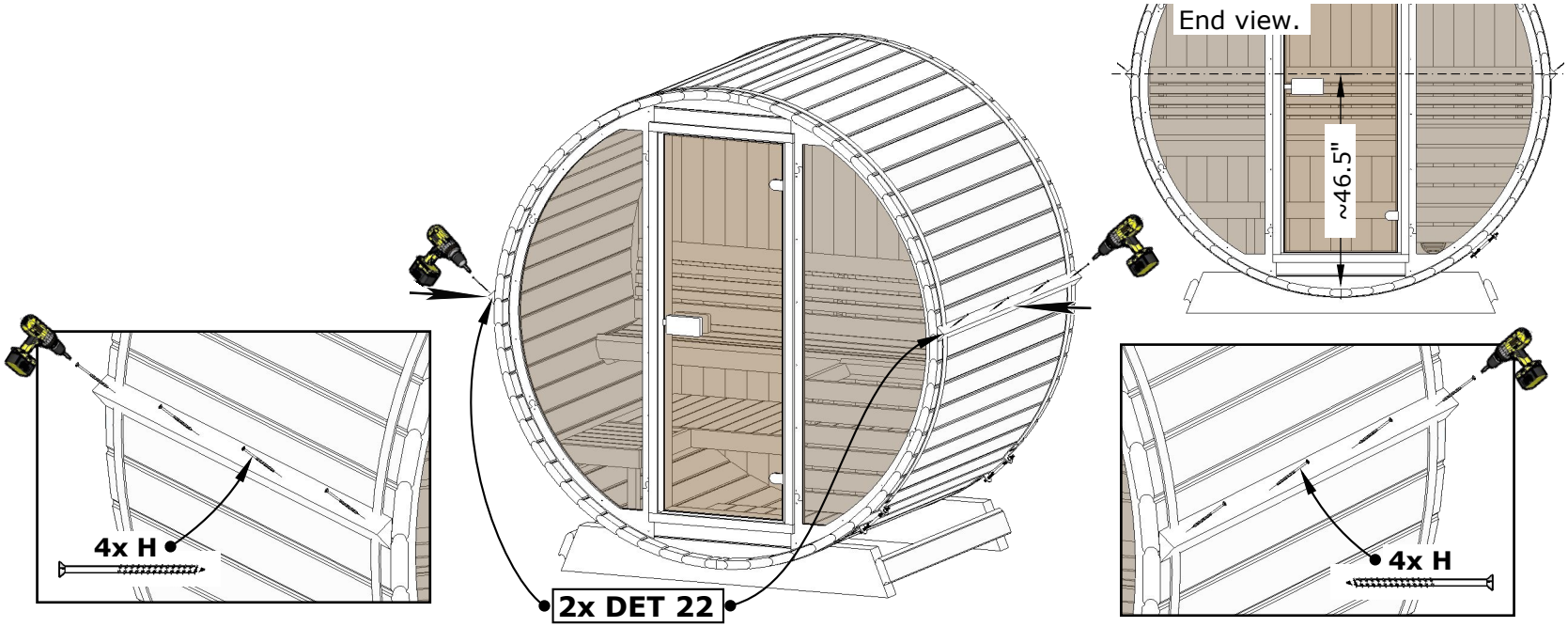

I

Attention! Refer to shingle installation instructions provided on package.

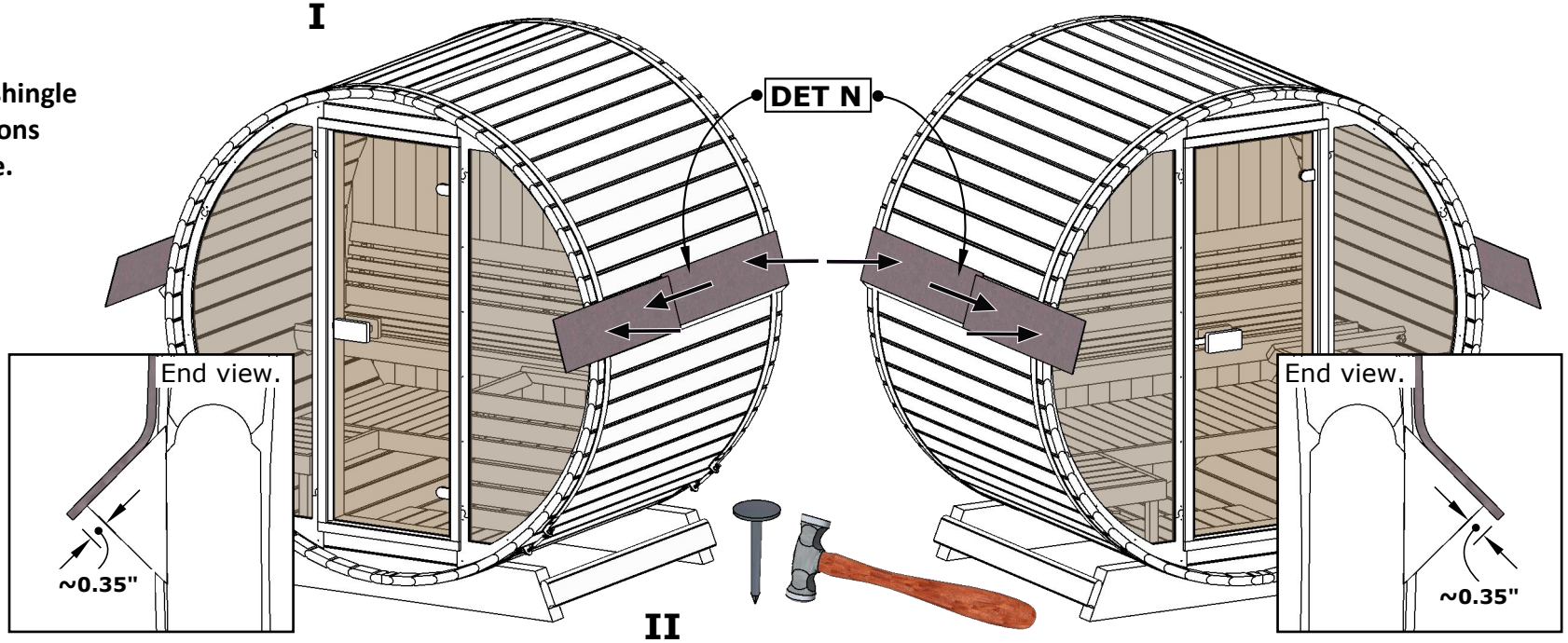

II

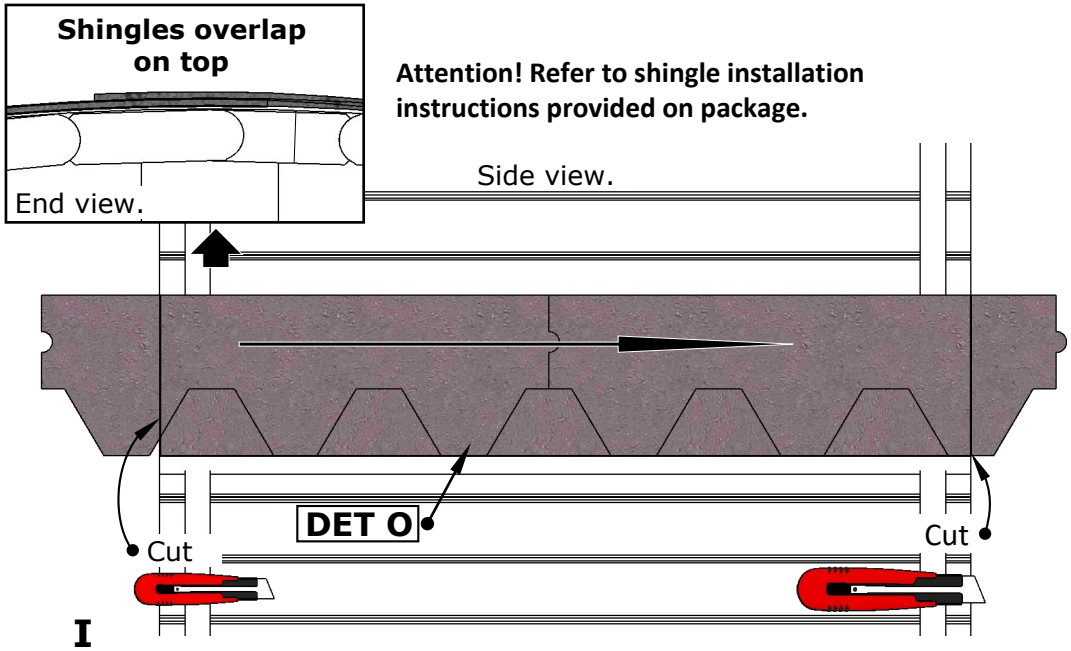
Shingles overlap on top
End view.
Attention! Refer to shingle installation instructions provided on package.
Side view.
DET O
Cut
Cut
I

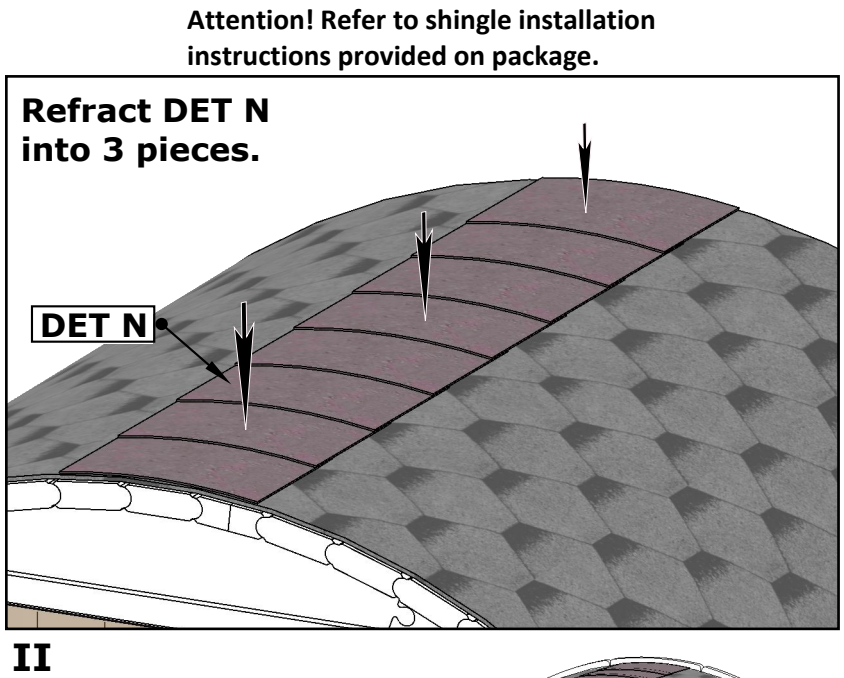
Attention! Refer to shingle installation instructions provided on package.
Refract DET N into 3 pieces.
DET N
II

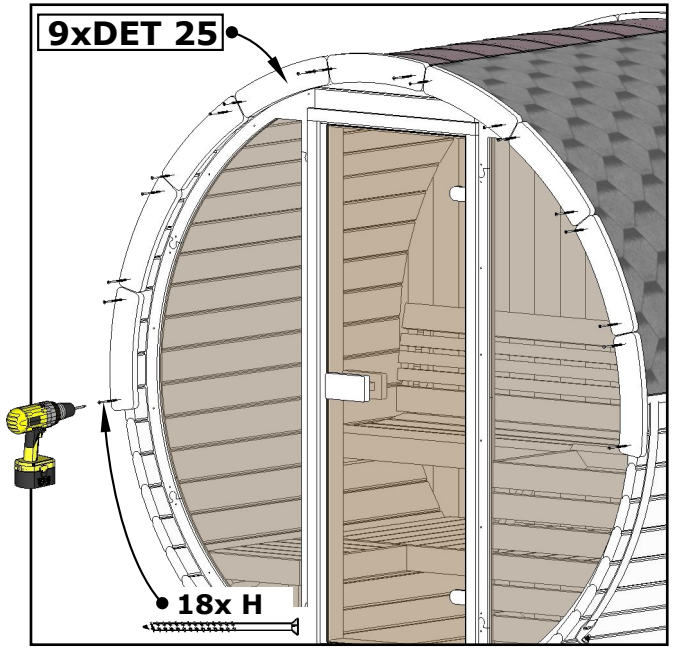
9xDET 25
18x H

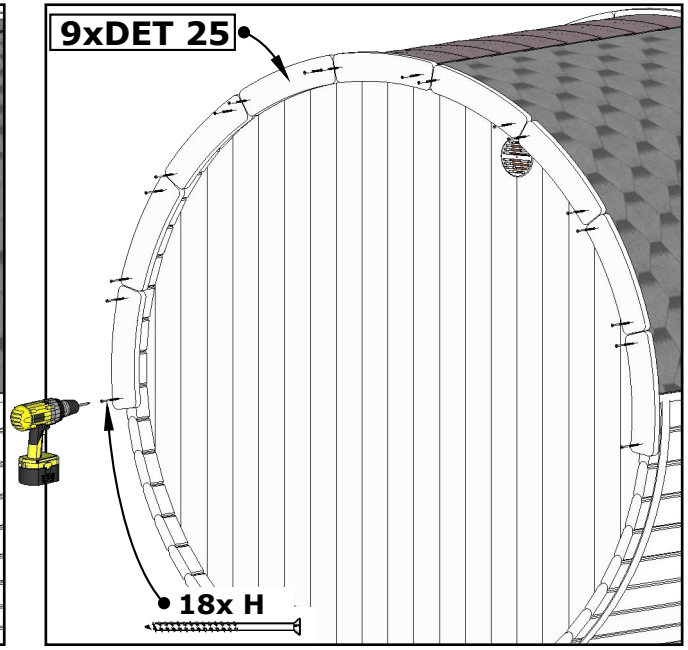
9xDET 25
18x H

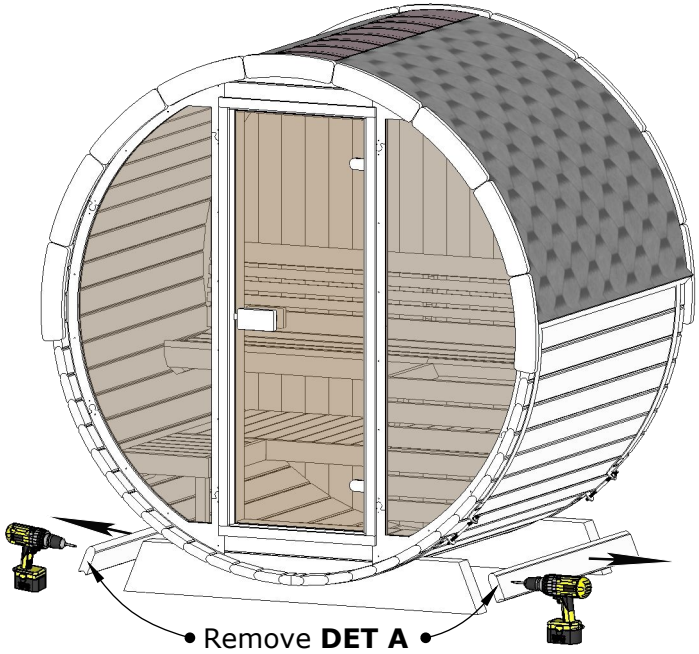
Remove DET A

III

saunalife

Installation Instructions

When building a wooden product, it is important to follow all installation instructions to ensure the quality and durability is guaranteed.

Important!

Identification number of the Product / **Serial Number:** **123456789**

Must be accompanied by the serial number to identify the product.

General Installation

- **Careful handling:** Treat all wooden parts with care during assembly to avoid scratches or friction.
- **Level foundation:** Ensure the sauna sits on a stable, level foundation for proper door and window operation. Ensure the base has enough stability to support the sauna.
- **Proper drainage:** Avoid constant water exposure to wooden materials.
- **Electrical and plumbing:** Hire qualified professionals for electrical work, including heater and lighting installation.
- **Wood treatment:** To ensure optimal performance and longevity of your Sauna, proper wood treatment is crucial. We strongly recommend treating all wooden components with a wood preservative. This includes unfinished skirting boards, if applicable, which should be treated immediately upon assembly.

Door and Window Maintenance

- **Regular checks:** Regularly inspect window and door hinges and locks. Tighten loose components and lubricate as needed.

- **DOOR ADJUSTMENT INSTRUCTIONS**

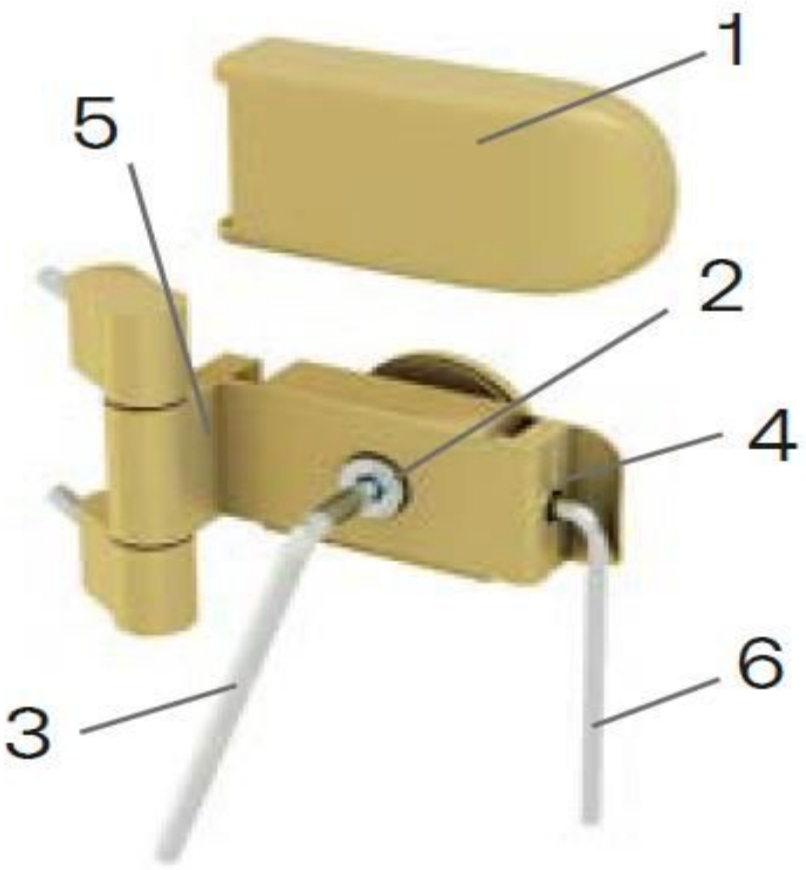

- You will need 3-mm (6) and 5-mm (3) hexagon keys for adjusting the hinges. Remove the plastic covers from the hinges (1). Loosen the fixing screws (2) one turn (do not remove the glass). If needed, the door can be shimmed up a bit from here vertically. If it needs to be adjusted left or right, turn the screws (4 & 5) as required. If one screw is turned counterclockwise, the other must be turned clockwise. Make sure both screws are tight when you have completed this step. Then tighten the fixing screws (2) when adjusted.

Technical Support
(224) 253-5909